JOURNAL OF FORMAL AND INFORMAL SECTORS

Volume: 2 Issue: 1
April 18, 2022
(ISSN: 2791-2604)

KMF PUBLISHERS

www.kmf-publishers.com

JOURNAL OF FORMAL AND INFORMAL SECTORS

(ISSN: 2791-2604)

Quaterly Journal of the KMF Publishers

Volume: 2 **Issue: 1**

April 18, 2022

Contents

@

http://kmf-publishers.com/jfis/

ARTICLE

OPEN

Revenue Generation and Utilization of Barangay Malama, Conner, Apayao: A Descriptive Documentary Analysis

Dr Randy A. Cabilatazan[1]

The purpose of this study is to determine the sources of revenue of barangay Malama and how are these revenues utilized. A descriptive survey method was used in the study to determine the sources of revenue, utilization of revenue, total revenue generated for the past five years and programs/projects/activities implemented. The study was conducted in Malama, Conner, Apayao. Primary and secondary respondents were utilized through interview and focus group discussion. Likewise documentary analysis was used. Findings revealed that revenue of the barangay came from local sources, internal revenue allotment and subsidy from local and national government. Such revenue were utilized for social, economic and other service programs. There was an evidenced that the barangay have generated revenue from 2015 to 2019. Moreover, the implemented programs/projects/.activities were under general, social service, economic services and budget requirement programs. Thus, this study concluded that there were various legal sources of revenue of barangay Malama and despite the limited revenue the barangay was able to implement its programs/projects/activities aligned with the development program of the barangay. However, there is still a need to enhance its revenue generation at the local source through making and enforced barangay ordinances so that it can generate more revenue and utilized it for more programs/projects/activities of the barangay.

Keywords: Revenue, generation, utilization social service, economic services, budget

Journal of Formal and Informal Sectors (2022), 2(1); DOI: https://doi.org/10.5281/zenodo.6498222

INTRODUCTION

One of the measurements for the development of a certain barangay is through its efficiency and effectiveness in its revenue generation and utilization. What strategies, methods, techniques are usually employing by the barangay officials to generate revenue for the improvement of their barangay and to cope financially? In like manner, how did they utilize such funds to come up with a projects/programs/activities that will benefit the barangay constituents. Especially that these barangay constituents are looking for visible projects/programs/activities to lessen their doubt when it comes to spending patterns of a certain barangay. Much so if these barangay officials finished their terms without any projects/programs/activities established or implemented.

[1]Apayao State College, Philippines
Received: 15 February 2022 Revised: 15 March 2021 Accepted: 7 April 2022
Published online: 18 April 2022

Relative to this is being transparent and accountable in delivering services to the people they serve. The Local Government Code of 1991 empowers local authorities to manage their own internal affairs pursuant to the mandate of local autonomy, LGUs must be equally held responsible and accountable for their acts of deviating from the expressed provision of law. It cannot be overemphasized that one of the primary concerns of the national government is to ensure that public funds shall be spent judiciously and only for the very purpose or purposes for which such funds are intended.

Former President Fidel V. Ramos stressed the importance of raising more revenues to propel economic recovery and growth. He referred not only to revenues raised by revenue generating agencies of the government such as the Bureau of Internal Revenue (BIR) and Bureau of Customs (BOC), but also to revenues and receipts earned by profit making government cooperatives. It is really necessary that there should be proper accountability for all these revenue due to government sound financial condition and proper cash management is essential to the success of the organization.

Revenue has been considered as a significant issue in the economic development of any nation. And it is of great importance to planning and development. Revenue generation and utilization in any local government can hardly be overemphasized. The organization more specially local government is known to have attained or sustained high level of economic growth and development without ample supply of funds and utilization of the establishment people of the locality are used to manage their affairs and achieved the set goals. This statement explain that local government system are established and expected to perform as well as carryout specific responsibility in improving the living standard of their local dwellers.

Under the Local Tax Code (PD 231) and under the Local Government Code of 1991 (RA 7160) under Book II, states that the Local Government are vested with a variety of taxing power are authorized to tap certain identified sources of revenue. Section 284 of the Local Government Code of the Philippines (RA 7160) sets up the formula for the distribution of the allotment. All or nearly all of the revenue that a local government has to spend comes from their Internal Revenue Allotment (IRA), though some local governments also have additional local sources of revenue such as property taxes and government fees. Typically for municipalities, the IRA accounts for 90% of total revenues. Since cities have more sources of local revenues, their IRA ranges from 50% to 70% of their total budget. A portion of each local government unit's allotment is set aside their Sangguniang Kabataan (SK) or youth council. The IRA is automatically released to each local government unit and may not be held back by the national government for any reason, except in the extreme case of an "unmanageable public sector deficit", in which case the allotment may be adjusted but provided it not be set to "be less than thirty percent (30%) of the collection of national internal revenue taxes of the third fiscal year preceding the current fiscal year"

According to Department of Budget and Management, barangays are authorized to generate income from taxes on stores or retailers with fixed business establishments and gross sales or receipts in the preceding year of P50,000 or less in cities and P30,000 or less in municipalities at the rate not exceeding one percent (1%) on such gross sales or receipts. A barangay can also collect income from the following: service fees or charges for the use of barangay property or facilities; barangay clearance fees; fees or charges for the commercial breeding of fighting cocks and on cockpits and cockfights; fees or charges on places of recreation with admission fees; fees or charges for billboards, sign boards, neon signs and other outdoor advertisements; toll fees or charges for the use of any public road, pier or wharf, waterway, bridge, ferry, or telecommunications system funded and constructed by the barangay; revenues from the operation of public utilities and barangay enterprises (markets,

slaughterhouses, etc.); fines (not exceeding P1,000) for the violation of barangay ordinances; and, proceeds from the sale or lease of barangay property or from loans and grants secured by the barangay government.

Every barangay today is gearing towards development. Implementation of programs/projects/activities are very inevitable because of the funds provided for by the government that will help improve a certain barangay. This is where barangay officials will be able to discharge their functions as to power, trust, service, honesty, accountability and responsibility in generating and utilizing such resources. But some barangays do not generate and utilize resources as much as they should. That is why the researcher is very motivated to know the revenue generation and utilization of barangay Malama. Hence, this study.

CONCEPTUAL FRAMEWORK

Public revenue in a federal system assumes that there are benefits to be derived from decentralization. Public revenue decentralization occurs when lower tiers of government have statutory power to raise taxes and carry out spending activities within specified legal criteria. This is referred to as the Overlapping Authority Model propounded by Wright (1978) on Intergovernmental relationships. Public revenue decentralization occurs when much of the money is raised centrally but part of it is allocated to lower levels of government through some revenue-sharing formula otherwise known as administrative decentralization.

Coupled with the problems on scarce financial resources, the broadening of the local government function, operation and responsibilities and the complexity of the government have to be responsive to increase demand of the people in the local areas. In the context of this network from problem, local authorities have to carefully ensure proposed activities, examine the corresponding estimated project on the basis of the benefit to be produced they would assure to the intended beneficiaries. These activities are to be accomplished with the application of the basic financial management function and budgeting, furthermore the increase of revenue generated and well-balanced and distributed expenditures are dependent on the extent of implementation on the taxing power and the schemes of expenditures of the Local Government Unit based on existing policies.

Oladimeji (1985) describes revenue as the total income generated from federal, state and local government. He stated further that what makes local government as constitutional matters is the revenue sharing perspectives. However, Hepworth (1976) describes revenue as an income or funds raised to meet the expenditure. He added further that revenue is a rising resources needed to provide government services. He also stated that there are two aspects of finance, which are income/revenue and expenditure, in other words, the sources of fund and utilization of fund.

Fayemi (1991) defines revenue as all tools of income to government such as taxes, rates, fees, fines, duties, penalties, rents, dues, proceeds and other receipt of government to which the legislature has the power of appropriation. The process of sourcing for revenue by governments is called revenue generation.

Local development nowadays is been thought as the key supporting elements for the total development and social cohesion. Implementing local development by means of the specific institutions, such as Development Agencies, specially designed and established for this purpose is the most effective and convenient way for accomplishing the expected benefits from local development. Local development has several reinforcing poles. Without underestimating the other factors important for local development, three main poles can be stated as the most crucial elements for local development, namely the market knowledge and experience, academic ground and internationalization. Regarding the

content and the necessities of local development, these three factors are considerably important. In order to achieve a total development and a beneficial social cohesion, local development is seen as among the most effective path. By well-understanding the key elements for local development and by deploying the accurate and built on purpose institutions, the local development can be succeeded and sustained. (Kisman, et. al, 2014)

Good governance is to promote and sustain holistic and integrated human development. The central focus is to see how the government enables, simplifies and authorizes its people, regardless of differences of caste, creed, class, and political ideology and social origin to think, and take certain decisions which will be in their best interest, and which will enable them to lead a clean, decent, happy, and autonomous existence. Good governance manages and allocates resources to respond to combined problems of its citizens. Hence states should be assessed on both quality and quantity of public goods provided to citizens. The policy that supply public goods are guided by principles such as human rights, democratization and democracy, transparency, participation and decentralized power sharing, sound public administration, accountability, rule of law, effectiveness, equity, and strategic vision in order to rid corruption, provides rights, the means, and the capacity to participate in the decisions that affect their lives and to hold their governments accountable for what they do. (Srivastava, 2010).

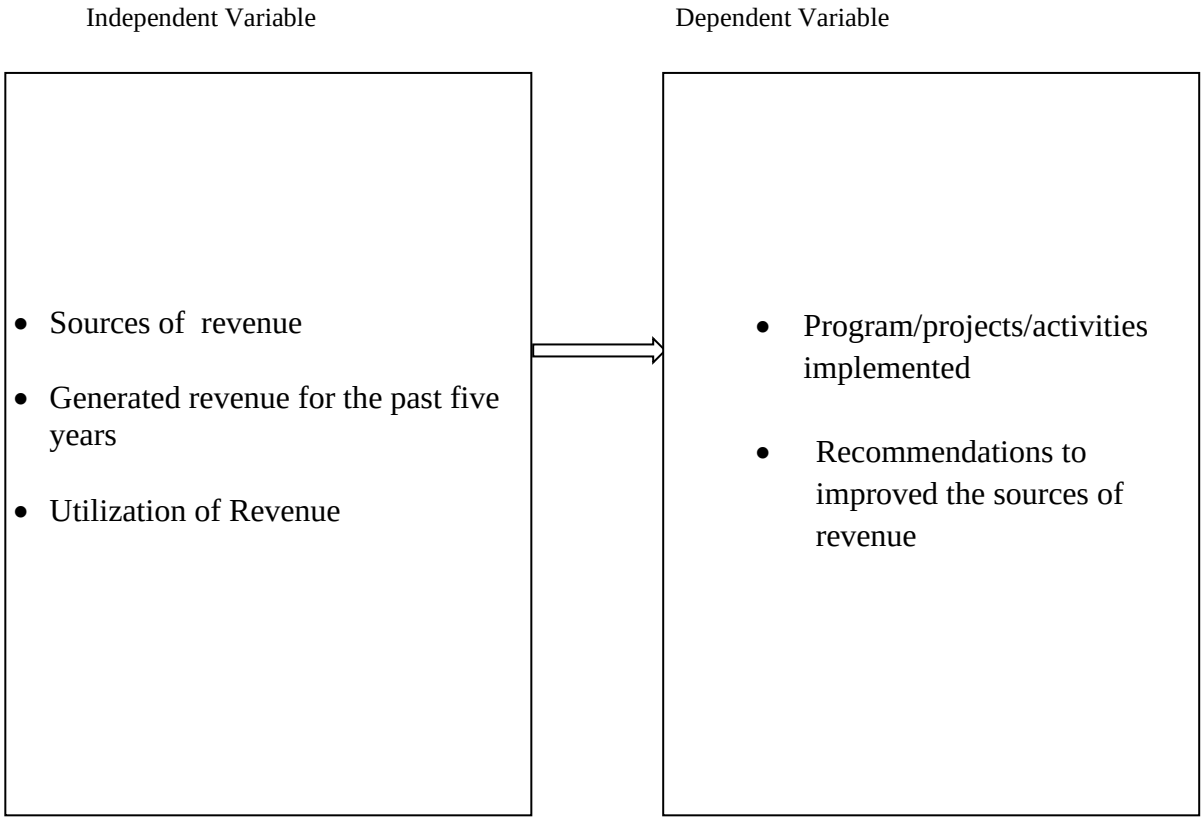

Figure 1 Research Paradigm

The paradigm showed the independent variables and dependent variables. Dependent variables consisted of the sources of revenue, generated revenue for the past five years and utilization of revenue. These variables would determine the programs/projects/activities implemented by barangay Malama and could identify recommendations to improved the sources of revenue of barangay Malama which formed part of the dependent variables.

STATEMENT OF THE PROBLEM

This study aimed to determine the revenue generation and utilization of barangay Malama, Conner, Apayao: A descriptive documentary analysis, 2015-2020.

Specifically, this study sought answers the following questions:

1. What are the sources of revenue of barangay Malama?
2. How much is the generated revenue of barangay Malama for the past five years?
3. How was the revenue utilized?
4. What are the programs/projects/activities implemented for the past five years?
5. What are the recommendations to improved the revenue generation of barangay Malama?

SIGNIFICANCE OF THE STUDY

This study were beneficial to the following:

Local Government Unit. The result of this would study serve as a basis in formulating plans and policies to be implemented by authorized agencies to increase the need of the people.

Barangay Officials. The result of this study could serve as guide to for them to know their strengths and weaknesses in taking their responsibilities on effective and efficient governance particularly on financial management.

Barangay Constituents. That this study would encouraged them to become more participative during meetings of the barangay, and continue to be an active partner in the development of the barangay.

Entrepreneurs. It is envision that the result of this study emphasized the importance of paying fees that they are to be benefited that adhering to such would promote the welfare of the community and would lead to the improvement and development of a certain barangay.

Researcher. That the study motivated him to engaged or conduct more researches.

Future Researchers. This study serve as a guide or basis for future researchers who would be conducting further studies along this line.

SCOPE AND DELIMITATION OF THE STUDY

This study was focused in barangay Malama, Conner, Apayao, particularly on the revenue generation and utilization for the year 2015-2020.

Definition of Terms

For clearer understanding, the following terms used were defined operationally in this study:

Generated revenue – the total amount of income or funds derived by the barangay from its different sources.

Revenue – the income or funds generated by the barangay.

Sources – this is the strategy use by the barangay in order to accumulate or raise its revenue

Utilization – this is the action of using the revenue of the barangay in its intended purpose or how the barangay used the revenue for productive undertakings.

REVIEW OF RELATED LITERATURE

Adejoh et. al (2019), to increase revenue, encouragement of tax compliance is advocated. Also, control measures should be put in place to check possible frauds and embezzlement in revenue generation and utilization of State governments.

Adenugba et. al (2013), Revenue generation is the nucleus and the path to modern development.. The study revealed the various methods of generating internal revenue, which are the enforcement of tax personnel, contribution, and creating awareness to the public. The findings of the study however show that revenue administration agencies need to be reviewed to generate more revenue.

Assiamah et. al (2015), on mobilizing sustainable local government revenue revealed that property rates and business operating license fees constitute the major revenue sources for local government authorities. Accurate assessment of these revenues enhances the revenue base and effectiveness of their generation. Assessment of property rates and business operating license fees have been identified as one of the limiting factors that inhibit the revenue potential of local government authorities.

Cuillier, et. al (2011), others have had to seek revenue from other sources. Café's, for credit courses, grants and partnerships with athletics departments are just few of the ways which supplements their budgets. This study gives an overview of revenue generation ideas and issues to consider.

Dang et. al (2015), the study examines the impact of revenue generation and utilization on social service delivery. The study finds that revenue generation as a whole has an impact on social service delivery with majority of the sources of revenue, coming from federation account, capital receipts and other revenue.

Dickson (2012), examine the effectiveness of revenue generation and utilization in the local government system, the study is designed to address the issue of revenue generation and utilization.

Ibrahim (2014), revenue is a very essential element in the running of any administration or government, this government could be federal, state, or local or even private establishment or organization. This is because it is through the revenue as a source of finance to the organization that the said organization will be able to carry out its activities or affairs efficiently and effectively. This revenue could mean money which comes to a person, organization or government and such source could be property, shares, services etc. Revenue could also mean money raised by a person, organization or government of a country or state from many sources of taxes or levies available to it.

Kithatu-Kiwekete (2013) the rationale for local fiscal autonomy suggests that local expenditure and local revenue generation should remain in close proximity. This is achieved through fiscal decentralisation to local government, to ensure efficient provision of local services that align with local needs, and to improve accountability to residents.

Oduola (2019), examined sources of tax revenue and its utilisation. The study revealed that tax revenues are often sourced from fees and charges like fines, right of occupancy, motor park/market/transport. Further, the results revealed that tax revenues are mainly utilised on personnel cost, education, health and medic.

Tijani et. al (2019), examine revenue generation and performance in local government council. Local governments should strive towards improving internally generated revenue and instill transparency and accountability in their management structure. It was recommended that there should be adequate supply of social and economic services. Efforts of local governments should not only be directed towards the revenue yielding activities alone, but also to the provision of social services like good roads, basic

health facilities, environmental sanitation, town halls, street light, water supply etc.

RESEARCH METHODOLOGY

Research Design

This study used the descriptive survey method which determined the sources of revenue of the barangay Malama, revenue generated for the past five years, utilization of revenue, programs/projects/activities implemented and recommendations to improved the sources of revenue.

Locale of the Study

This study was conducted in Malama, Conner, Apayao. Malama is one of the twenty-one barangay in Conner, Apayao and it is the business center of Conner, Apayao.

Respondents of the Study

Primary respondents to this study were the barangay officials namely the barangay Captain, barangay Kagawad and barangay secretary and barangay treasurer with a total of nine (9) respondents. Budget Officer from Local Government Unit, former barangay officials, presidents of organization in Malama, Conner, Apayao were utilized as key informants or the secondary respondents.

Research Instrument

This study made use of interview. All of the barangay officials were personally interviewed by the researcher including the different informants.

Data Gathering

The researcher sought approval from the barangay Captain in pursuit of this study and conducted the interview and focus group discussion to the different respondents. Then finally, the data gathered were validated to the different informants. Data obtained were consolidated, tabulated, analyzed and interpreted.

ANALYSIS OF DATA

Documentary analysis was used in determining the sources of revenue of barangay Malama including the revenue generated for the past five years, utilization of revenue and the projects/programs/activities implemented. Ranking was used in identifying the recommendations which contribute to the improvement of generation of revenue of the barangay.

DISCUSSION OF RESULTS

Table 1 presents the sources of revenue of barangay Malama, From the data gathered during the Focus Group Discussion (FGD) and validated from the record of the Budget Office of Conner, there were three different sources of revenue of barangay Malama these were came from local sources, Internal Revenue Allotment and subsidy from Local and National Government Unit. Local sources include share in real property tax, business tax, community tax, clearance and certification fees, interest income, permit and licenses and fines collected from individuals on violations to barangay ordinance. This shows that barangay Malama have various and legal sources of revenue. As stated in the Local Government Code of the Philippines, book II, Section 129, Each local government unit shall exercise its power to create its own sources of revenue and to levy taxes, fees, and charges subject to the provisions herein, consistent with the basic policy of local autonomy.

Table 1. Sources of Revenue of Barangay Malama

1.	Local Source	
	a.	Share in real property tax
	b.	Business tax
	c	Community tax
	d.	Clearance and certification fees
	e.	Interest income
	f.	Permit and license
	g.	Fines in violation to barangay ordinances
2	Internal Revenue Allotment	
3.	Subsidy from Local and National Government Unit	
	a.	Municipal aide
	b.	Provincial aide
	c.	National aide

Table 2 presents the total revenue of barangay Malama, the source of this data was taken from the report on programmed appropriation and obligation by object of expenditures from the budget office of Local Government Unit of Conner, Apayao for the past five years. The total revenue reported from 2015-2020 was amounted to 14,424.30. From the said report showed that there was a limited revenue of the barangay to augment its yearly expenditures and said revenue was fully utilized.

Table 2. Total revenue for the past five (5) years

Year	Amount
2015	1,919,089.65
2016	2,232,930.00
2017	2,653,480.05
2018	2,853,598.00
2019	3,144,185.00
2020	3,621,486.60
TOTAL	14,424,769.30

Table 4 presents the programs/projects/activities implemented by barangay Malama for the past five years, such PPA's were classified as general services, social services, economic services and budget requirement programs. This data came from the report of certified statement of receipts taken from the budget

Table 3 presents the utilization of revenue of barangay Malama as a result of the focus group discussion conducted to the different barangay officials of Malama the revenue of the barangay was utilized for the construction and implementation of all statutory and contractual obligation or social services programs; procurement of equipment, materials and supplies of the barangay; meals and snacks during barangay meetings and assemblies; implementation of all budget requirement programs; for economic services; and trainings and seminars of barangay officials. This shows an evidenced that revenue of barangay Malama was utilized for social, economic and other service programs. Such utilization of programs, projects and activities are aligned with the development program of the barangay.

Table 3. Utilization of revenue

1.	The revenue was utilized for the construction and implementation of all statutory and contractual obligation or social services programs.
2.	The revenue was utilized for the procurement of equipment, materials and supplies of the barangay.
3.	The revenue was utilized for meals and snacks during barangay meetings and assemblies.
4.	The revenue was utilized for trainings and seminars of barangay officials.
5.	The revenue was utilized for implementation of all budget requirement programs.
6.	The revenue was utilized for economic services.

office of LGU Conner. As shown from the report, there were few PPA's of the barangay but were properly implemented. In the study of Boysillo, S.(2017) programs and projects are implemented because funds had been given to the barangay as a subsidy for continuous development

Table 4. Programs/Projects/Activities Implemented for the past five (5) years

Year	Programs/Projects/Activities Implemented
2015	Social Services Canal lining in Purok 1, 4 and 7 Street light in Purok 2 Economic Services Improvement of farm-to-market-road in Purok 5 Spring Development Budget Requirement Program Anti-Drug Abuse Solid Waste Management Violence Against Women and Children Calamity Mitigation and preparedness Quick response Senior citizen
2016	Social Services Street light in Purok 4 and 6 Economic Services Improvement of farm-to-market-road in Purok 1 Budget Requirement Program Anti-Drug Abuse Solid Waste Management Violence Against Women and Children
2017	Social Services Canal lining in Purok 5 Economic Services Deep well Budget Requirement Program Anti-Drug Abuse Solid Waste Management Violence Against Women and Children
2018	Economic Services Water system Budget Requirement Program Barangay Election Anti-Drug Abuse Solid Waste Management Violence Against Women and Children Senior Citizen and Person with Disability
2019 - 2020	General Services Construction of barangay outpost at Purok 1 Construction of stock room of barangay hall Social Services Concreting of pathway in Purok 2, 3, and 7 Canal lining in Purok 4 and 6 Economic Services Improvement of farm-to-market-road Budget Requirement Program Anti-Drug Abuse Solid Waste Management Violence Against Women and Children Gender and Development Barangay Child Protection Senior Citizen and Person with Disability COVID 19 related medical and health supplies and materials

Table 5 presents the recommendations from the barangay officials during the focus group discussion in order to improved the sources of revenue generation, rank 1 is construction workers coming outside the municipality should pay fees in the barangay. Rank 2 collecting fees on outside ambulant vendors then rank

3 fines during absences of Barangay Officials during clean up activities and lastly Small Town Lottery outlets should also pay fees. This implies that recommendations identified by the barangay officials need barangay ordinance to be enforced so as to strengthen its revenue generation.

Table 5. Recommendations to improved the revenue generation

Recommendations	Rank
1. Fines during absences of Barangay Officials during clean up activities.	3
2. Collecting fees on outside ambulant vendors.	2
3. Construction workers coming outside the municipality should pay fees in the barangay.	1
4. Small Town Lottery outlets should also pay fees.	4

CONCLUSION

Based from the results of this study, it can be concluded that:

Barangay Malama generated its revenue from various legal sources to mention Internal Revenue Allotment, subsidy from Local and National Government Unit and local sources include share in real property tax, business tax, community tax, clearance and certification fees, interest income, permit and licenses and fines collected from individuals on violations to barangay ordinance. Though the generated revenue was limited the barangay was able to fully utilized it and implemented various programs/projects and activities particularly along general services, social services, economic services and budget requirement programs that was aligned to the barangay development program.

Recommendations

The following are recommended:

Sustain the existing revenue generation and utilization good practices. Strengthened local sources of revenue through making resolutions, policies and other ordinances. Further study or a comparative study should be undertaken to cover wider scope or coverage to include other barangay in Conner, Apayao.

BIBLIOGRAPHY

Adejoh, M. O., Ekeyi, S., & Mary, S. J. (2019). *Internally generated revenue and fiscal viability of state governments in Nigeria*. Lafia Journal of Economics Management Sciences, 4(1).

Adenugba, A. A. & Ogechi, C. F. (2013). *The effect of internal revenue generation on infrastructural development: a study of Lagos State internal revenue.* Journal of Educational and Social Research, 3(2). DOI: 10.5901/jesr 2013.

Assiamah, J. K. & Biitir, S. B. (2015). *Mobilising sustainable local government revenue in Ghana: modeling property rates and business taxes.* ResearchGate. DOI:10.5130/cjjg.v0i0.4496.

Boysillo, S. (2017). *Governance of the barangay chairpersons in the municipality of Ubay, Bohol.* International Journal of Business and Management Studies, 9(1), 50-63.

Cuillier, C. & Stoffle, C. J. (2011). *Finding alternative sources of revenue*. Journal of Library Administration. Doi.org/10.1080/01930826.2011.601276.

Dang, D. Y., Bako, E. & Lalu, I. D. (2015). *Impact of revenue generation an utilization on social service delivery in Plateau State, 2006-2015.* Tax Academy Research Journal, 1 (1), 29-48.

Dickson, J. (2012). *Revenue generation and utilization in the local government system: problem and prospects.* Academia. https://www.academia.edu/13716988.

Ibrahim, H. (2014). *The sources of revenue in an Islamic system of administration.* UDUS Open Educational Resources.

Kithatu-Kiwekete, A. (2013). Fiscal decentralization in the DRC: evidence of revenue assignment. International Journal of Economics and Finance, 9(2).

Oduola, S. O., Isawaneh, B., Ogubela, G. K. & Babarinde, L. B. (2019). *Revenue generation in Lagelu local government area of Oyo State: a correlate of tax mobilization and utilization*. Canadian Social Science, 15(1).

Tijani, O. J. & Ali, A. (2019). *Revenue generation and performance in local government council areas in Nigeria.* Journal of Arts, Management, Science and Technology, 6(3).

http://kmf-publishers.com/jfis/

RESEARCH ARTICLE

OPEN

Factors Impacting Choice of Institution in Canada: An Econometric Analysis

Tanveen Kaur[1] and Anjali Mehra[2]

India stands second in the world after China, where the number of students from India moving to other countries for higher studies is concerned. In the last fourteen years the number of children being sent from India has increased four times. The present study tries to explore the factors responsible for migration of Indian youth to Canada using the technique of factor analysis. The survey conducted revealed that the major factors affecting the choice of institutes in Canada by Indian students were Student Friendly Nature of the Institution, Linkage Factor, Ease of admission in Institutes and Prominence of Institutes.

Keywords: Punjab, Higher Education Institutes, Canada, Exploratory Factor Analysis, Confirmatory Factor Analysis

Journal of Formal and Informal Sectors (2022), 2(1); DOI: https://doi.org/10.5281/zenodo.6498527

INTRODUCTION

Economic models of choice of higher education institutes are based on assumption that the choice is a rational process, and that the students do what is best for them (McFadden,2001). Worldwide, the decision to invest in higher education is treated as an investment decision and therefore a lot of attention is being paid to marketing of higher educational institutes. The market for higher education has changed significantly and competition for attracting students (being treated as consumers) has forced the institutions to focus on diverse areas as their strengths along with their academic achievements (Mazzarol and Soutar, 2012).

Research on the choice of an institute shows that the perspective students short list and evaluate attributes like tuition fees, institutional quality, reputation of the institutes etc. which they consider important while choosing the institute (Hossler and Gallagher, 1987). Lancaster (1966) in his research concluded that expected earnings after graduation, distance from home, compliance of the program with personal interests, influences perspective student's probability to enroll at a particular institute. Manski and Wise (1983) found that the students enroll in that higher education institute where they feel they would have maximum utility. Hossler and Gallager (1987) found

[1]Research Scholar, School of Social Sciences, Guru Nanak Dev University, India Emails: tanveenkaur94@gmail.com, tanveenss.rsh@gndu.ac.in
[2]Associate Professor in Economics, School of Social Sciences, Guru Nanak Dev University, India, Emails: anjalieco@gmail.com, anjali.social@gndu.ac.in
Received: 14 February 2022 Revised: 20 March 2022 Accepted: 10 March 2022
Published online: 18 April 2022

various social and individual factors such as parental encouragement, peer pressure and academic performance lead to selection of an institute.

On the other hand, Kane (1996) and Heller (1997) found that cost of opportunities post the completion of studies influenced students' choice while higher expected earnings were considered as critical factor by Soutar and Turner (2002). Price et.al. (2003) found that facilities offered by an institute (such as computer and library equipment, university accommodations) played a commanding role during the selection of higher education institute. Location of industry was considered as dominant factor by Foskett et.al. (2006). Clark (2007) and Stephenson et. al (2016) found the decision of the students is usually based on reputation and ranking of higher education institute in World University Ranking. Ahmed et.al (2010) were of the view that factors such as reliability, responsiveness, assurance, and empathy can be considered as the key factors by the students to figure out the higher education institute for them. They extended the views in 2013 by examining the role of quality assurance and accreditation of the institutes and concluded that these factors are gaining importance in attracting the students. Kunwar (2017) found that financial factors, university specific factors, location specific factors and social life related factors are also responsible for the selection of HEI's while Seetah (2019) revealed that physical environment, transitional support and word of mouth have positive influence on the student's decision while educational and support facilities do not have a significant effect on the student's choice. Walsh and Cullinan (2020) in their study, highlighted the importance of peer, sibling and parental influence on this decision along with course reputation and availability of work placement. Moody (2020) found that role of social media was critical in choice of higher education institute, when it was combined with the other factors such as size of institution, scholarship offerings and geographic regions.

For Indian students, Brein et. al. (2007) in their paper found that decision of the students is based on the factors like programme content, international reputation, funding, job prospects and quality of education being provided. Singh and Shrivastava (2018) found that apart from quality of education and international reputation of higher education institute, prospective students' safety is also one of the critical factors affecting the choice.

Acquiring a particular degree is not only a signaling factor in the labor market but from where it is acquired also plays a crucial role in the job market. With regard to India, there is a general belief that acquiring degrees from abroad is better than acquiring an equivalent degree from the home country. This is due to the multifaceted challenges especially inadequate provision of training resulting in insufficiency of market ready skills for the youth in Indian HEI's (Tambi,2018). In a Report by Ministry of Overseas, Government of India (2019), it has been observed that there is a serious mismatch between demand and supply in case of higher education which has resulted in enrolment rate in higher education being as low as eighteen percent indicating tremendous increase in the student migration (AISHE, 2019). The total number of migrating students from India was 1702788 in 1995, which increased to 5085159 in 2019 showing an increase of 298 percent in these fourteen years (UNESCO Institute of Statistics,2019).

The preference of Indian students, with regard to choice of an institute abroad for higher education has changed from time to time. Till the earlier twenties, institutions in United States were the most preferred destinations, because the degrees provided by these institutes were not only accepted internationally but they also provided support facilities such as organization of workshops, web-based classes, computer-based tests etc. Open Doors Report, 2019 reported a decline in the number of Indian students because of revisions made in H1-B visa and global financial crisis after 2001 (Open Doors Report, 2019). The major beneficiary of these policies was Canada where the number of Indian migrants increased at compound annual growth rate of 51.38 percent during

the period of 2002-2020 (UNESCO Institute of Statistics, 2020). Indian students chose institutes in Canada not only because of the academic excellence of its Institutes but also due to the liberal immigration policies of its government and opportunity to work while learning.

From the above discussion, it becomes abundantly clear that multiple factors influence the choice of the higher education institutes. Indian students are preferring to choose an institute in far off countries like Canada rather than study in their own country, but there are dearth of studies reflecting the reasons of their choice. The present study is an attempt to examine the factors responsible for choosing a particular institute in Canada by migrating Indian students.

For this, the study has been divided into four sections including the present one. Section II gives the data source and methodology used for the present study. Section III analyses the results and Section IV concludes the findings and derives the policy implications.

DATABASE AND METHODOLOGY

The choice of higher education institute is considered to be the discrete choice of students, which is consistent with the qualitative choice. In order to examine the factors influencing student's decision to study in Canada following null hypotheses was framed:

> H_0: There is uniformity in factors affecting choice of higher education institute in Canada among students from Indian Punjab.

In order to test the above hypothesis, a structured questionnaire was prepared and responses of 157 students belonging to Punjab and currently studying in different institutes of Canada were collected through Google forms. The response to the questionnaire was based on the five-point Likert scale which were 5 (Strongly Agree), 4 (Agree), 3 (Neutral), 2 (Disagree), 1(Strongly Disagree).

Based on responses, following variables have been selected to reflect factors influencing choice of institutions.

A_1: Quality of education being provided by the institutes

A_2: Prestige of a Degree/Diploma provided by the Institute

A_3: Cost of studying at the Institute

A_4: The amount of financial support offered by the Institution concerned.

A_5: Prior knowledge about the Institute through the acquaintances

A_6: The availability of a particular program in the selected Institution.

A_7: Effectiveness of communication by the Institutes

A_8: The size of Institute

A_9: Location of the Institute

A_{10}: Speed of admission process in the particular institute

A_{11}: Institute Ranking as per TIMES and QR ranking.

It was observed that since the variables selected were highly correlated among themselves, it would result in the problem of multicollinearity. This would lead to inaccurate and unreliable results in case regression analysis was applied (Kalpana and Shibu 2014). Therefore, statistical technique of Factor Analysis has been used. This technique is used to identify and isolate the variables which affect and cause the variations in choice of Higher Education Institutes. It is the interdependence technique under which all the variables are considered simultaneously which are related to each other. (Ozturk, 2011). This analysis assumes that the inter-correlation occurs because of few basic factors are shared in common by different

variables in different degrees. It attempts to analyze the value coefficient of regression where factors are regressed on the factors (Mehra & Nanda, 2012).

Before the application of Factor Analysis, in order to indicate the suitability of the data, structural detection KMO (Keyser-Meyer-Olkin) measure was done. It indicates the proportion of variance in variables that may be caused by underlying variables. The Bartletts of sphericity was applied to test the hypothesis that the correlation matrix is an identity matrix or not. If it is an identity matrix, it indicates that the variables are not related and therefore unsuitable for structure detection. If the value is less than 0.05 of the significance levels then factor analysis is useful. The technique of Factor Analysis was done in two stages. In the first stage, Exploratory Factor Analysis was conducted using SPSS version 26.0. It was done to find the factors which generally influenced migrating students' choice of the institute. The factor loading of each item above 0.50 indicates the meaningfulness of the questionnaire. Eigenvalues and scree plot highlighted variance contributed by each factor and the values with eigenvalue less than 1.0 are removed from the list.

The second stage of analysis was the Confirmatory Factor Analysis which was done using AMOS 18.0. It was applied on the sub-sample and goodness of fit in CFA was evaluated at x^2 ($p>0.05$), Comparative Fit Index (CFI>0.90), Tucker Lewis Index (TLI>0.90) and Root mean square error of Approximation (RMSEA<0.08). After the Cronbach's alpha coefficient was calculated to test the reliability of the total and the sub-constructs. Alpha values above 0.60 are considered to be satisfactory.

RESULTS AND DISCUSSIONS

Based on the responses received from a sample of 157 students the following results were derived.

Student Profile Characteristics

- Of the 157 respondents, 63.5 percent of the respondents were male and 36.5 respondents were female, reflecting the desperation of Indian families to send their wards specially males abroad.
- Most of the respondents (71.2 percent) were from the age group 21-25 years which highlighted that India is unable to retain its youth due to lack of employment opportunities in the State and therefore questioning its Demographic Dividend story of the country.
- Of the total sample, 97.5 percent of the respondents were pursuing full time courses of which large proportion (63.05 percent) were pursuing Diplomas, 26.5 percent pursuing undergraduate degree and 10.45 percent of the respondents were pursuing post-graduation in the institutes of Canada. This dominance of perusal of mainly diplomas, clearly shows that the main motive of the *Indian* youth was to settle abroad and not obtaining quality education.

Table 1 gives the responses of the students regarding their decision influencing the choice of institute in Canada on five-point Likert scale (in percentage)

Table I: Influencers of choice of institutes in Canada. (in percentage)

Coding of Factors	Factors Underlying Students Choice of Institution Scale	5 Strongly Agree	4 Agree	3 Neutral	2 Disagree	1 Strongly Disagree	Total Percentage
A_1	Quality of Education	19.3	19.3	22.9	25.3	13.3	100
A_2	Prestige of Degree/Diploma	13.3	10.8	18.1	30.1	27.7	100
A_3	Cost of Studying	19.3	37.3	26.5	8.4	8.4	100
A_4	Financial Support Offered	16.9	27.7	31.3	13.3	10.8	100
A_5	Knowledge about the Institute	3.6	13.3	28.9	22.9	31.3	100
A_6	Availability of Programme	3.6	14.5	33.7	20.5	27.7	100
A_7	Effective Communication	34.9	30.1	12.0	8.4	1.2	100
A_8	Size of Institution	4.8	24.1	24.1	22.9	24.1	100
A_9	Location of the Institute	16.9	30.1	26.5	15.7	10.8	100
A_{10}	Fast Admission Process	13.3	33.7	31.3	12.0	9.6	100
A_{11}	Foreign Ranking of the Institute	1.2	16.9	50.6	27.7	3.6	100

Source: Based on online survey.

(A_1) Quality of Education: It is observed from the Table that quality of education was dominant factor for only one third (38.6 percent) of the respondents which was equal to the number of respondents disagreeing with this view and one fifth of the respondents were neutral. This clearly indicated that quality of education being provided by institutes did not play an important role in scheme of choosing an institute for admission by Indian tudents.

A_2 Prestige of Degree or Diploma sopted by the students was not considered to be an important factor as only 24.1 percent of the total respondents have chosen the institute for its prestige while for more than half of the respondents (57.8 percent) did not subscribe this view and one fifth of the respondents were neutral.

A_3 Cost of Studying which included the tuition fees charged by a particular institute and the living expense in respective country influenced the decision greatly, 56.6 percent of the respondents considered cost as an important factor while only 16.8 percent were not taking cost into consideration while choosing an institute. This highlighted the fact that student preferred going to those institutions which were economical and affordable to them.

A_4 Financial Support in the form of scholarships being offered by concerned institute to the international

students attracted them while making a choice, as 44.6 percent of the respondents agreed to this view while, 31.3 percent of the respondents had a neutral response regarding this factor.

A_5 Knowledge about the Institution prior to the admission process was very less as it was found that majority of students i.e., 54.2 percent of sampled respondents were not aware about the institute and had taken admission on the advice of agents. Only 16.9 percent of the respondents gave an affirmative response regarding this variable indicating that they had explored the options before the admission process.

A_6 Availability of Particular Program did not play an important role in the selection of an institute, as only 18.1 percent of the respondents had taken admission in a particular institute for a specific programme while, 48.2 percent of the respondents disagreed with the particular perception. This again highlighted the fact that the main motive of the students was just for the purpose of settling permanently in Canada.

A_7 Effective Communication: Communication strategies of the institution through seminars and social media were the major influencers for the student's choice as it was found that around 65 percent of the respondents were influenced by the advertisements and offers provided to them by institute and only 9.6% of the respondents did not agree with this variable.

A_8 Size of the Institution was also a minor element influencing the choice as the size of the institution, when the response of the students was gathered in this respect it was found that only 28.9 percent of the respondents subscribed this view while, 47 percent of the respondents gave negative response.

A_9 Location of the Institution was an important factor responsible for the migration of students to a particular area, with 47 percent respondents giving weightage to this variable agreeing to this view. It was observed that the majority preferred going to institutes located in the province of Toronto and British Columbia where living conditions were favorable and there was availability of part-time work opportunities.

A_{10} Fast Admission Process played a dominant role in selection of an institute as 47 percent of the respondents preferred going to that institute where that admission process was faster as compared to the others while one fifth of the respondents ignored this variable in their decision.

A_{11} Perception regarding the Foreign Ranking of Institution: Above Table shows that the ranking of the institution does not affect the decision of the students as 50.6 percent of the respondents gave neutral response regarding this variable while 31.3 percent of them did not agree that this variable effected their choice of Institute.

Table II: Results of Factor Analysis

Dimensions	Items	Communality	Eigen Values	% of Variance	Components 1	2	3	4	5
FACTOR- 1	A_3	0.737	2.225	20.230	0.737				
	A_6	0.774			-0.774				
	A_7	-0.636			-0.636				
	A_{10}	0.740			0.740				
FACTOR- 2	A_8	0.748	1.523	11.846		0.748			
	A_9	-0.782				-0.782			
	A_{11}	0.505							
FACTOR- 3	A_1	-0.520	1.258	11.345			-0.520		
	A_4	-0.709					-0.709		
FACTOR- 4	A_2	0.746	1.092	9.923					0.746
	A_5	0.608	1.001	9.096					0.608

Extraction Method: Principal Component Analysis.
Rotation Method: Varimax and Kaiser Normalizations
Source: Author's Calculations based on survey

Stage I: Exploratory Factor Analysis

The KMO value was identified to check significance level of statistical criteria. It was found to be 0.628>0.50 indicating adequacy and high reliability of each factor.

In addition of KMO, Bartlett's Test of Sphericity was calculated (X^2=91.062 and p value< 0.002). This value also showed statistically significant results and also indicated that data was significant for Factor Analysis.

The technique of Principal Component analysis was performed using SPSS 26.0. Table II reveals the results of Factor Analysis. From the data, four factors were extracted accounted for the total variance of 55.345 percent. The values of communalities were greater than 0.5 and varied between 0.50 to 0.74. The eigen values of the factors were greater than one ranging from 1.092 to 2.224.

The first Factor was named as *'Student Friendly Nature of the Institution'* and explained the variance of 20.230 percent of total variation. It includes variables like cost of studying (A_3), availability of programme (A_6), effective communication (A_7) and fast admission process of institutions (A_{10}).

The second factor is a bipolar factor showing the variance of 11.846 percent and can be named as the *'Linkage Factor'*. The variables having positive factor loading is size of institution (A_8) and Ranking of the institute (A_{11}). Location of Institute (A_9) has negative factor loading as students going to Canada prefer going to places like Winnipeg, Alberta etc. where the living conditions are harsh but chances of permanent residency are high than in provinces of Toronto, British Columbia and Ontario.

The third factor is again a bipolar factor which variance 11.345 percent.it includes variables like Quality of Education (A_1) and Financial Support Offered (A_4) and is named as *'Ease of admission in Institutes'* and Effective Communication (A_7) and is named as 'Student Friendly Nature of Institution'. The variable financial support offered showed negative factor loading indicating that the students prefer going to institutes which gives them scholarships as compared to quality of education provided.

The fourth factor explains the variance of 9.940 percent and is named as *'Prominence of Institutes'*. It includes variable like prestige of degree or diploma being pursued by them (A_2) and prior knowledge about the institute (A_5).

Stage II: Confirmatory Factor Analysis.

The Principal Component Analysis suggested that five factors responsible movement of Indian students to the Canadian Institutes were Student Friendly, Ease of Admission in the Institutes, Linkage Factor and Prominence of Institutes. In order to confirm these results, Confirmatory Factor Analysis was done and provided fitness of the model suggested by Exploratory Factor Analysis.

Table III: Model Specification for Post Hoc Confirmatory Factor Analysis

Parameter	Coefficient
X^2	96.350
P-Value	0.001
Degree of Freedom	55
X^2/DF	1.752
RMSEA (Root Mean Square Error of Approximation)	0.096
GFI (Goodness of Fit Index)	0.804

Source: Based on Author's Calculations

The CFA model was compared using X^2 ,CFI, GLI, and RMSEA. Table III represents the model specification for post hoc CFA. The literature on CFA reveal that standardized loadings should be larger than –0.3 or 0.5 because if loadings are higher, then the Model is considered to be good. The data supports the above four factor model with fit indices out of 11 variables i.e. four factors have high factor loading more than 0.50.

Figure II: Finalized measurement of Confirmatory Factor Analysis

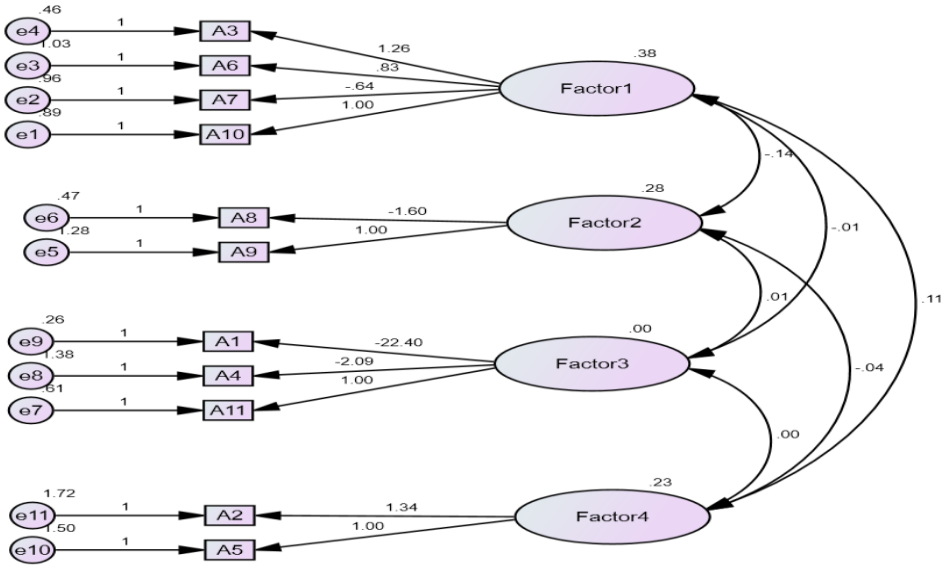

Source: Based on Author's Calculations

The result of standardized loadings of path diagram show that the first factor consists of four variables and all the items of this factor have high factor loadings ranging from -0,64 to 1.26. Among the four variables, cost of studying in the institute has the highest factor loading of 1.26.

The second factor includes two items one with negative factor loading and one with positive factor loading. The loadings of these factors range from 1.00 to 1.60.

The third factor includes three variables having factor loading more than 1.00. quality of education provided (A_4) by the institute had the maximum factor loading. This factor has overall highest factor loading.

The fourth factor included two variables also having high factor loadings. The loading od this factor ranged between 1.00 to 1.34.

Table IV: Reliability Analysis of the Factors

Construct	Sub-Construct	Alpha Values	Overall Cronbach Alpha
Factors Chosen by Students for Canadian Institute	Student Friendly	0.937	0.923
	Marketing Factor	0.901	
	Reputation Factor	0.931	
	Linkage Factor	0.911	
	Prominence of Institutes	0.951	

Source: Based on Author's Calculations

Reliability means the stability and consistency of the scores obtained. A measure of reliability id measured as internal consistency through Cronbach's alpha, frequently referred as the alpha coefficient of reliability or simply alpha. The reliability values of the variables are shown in the above table IV i.e., student friendly (0.937), marketing factor (0.901), reputation factor (0.931), linkage factor (0.911), prominence of institutes (0.951). Overall Cronbach's alpha reliability coefficient was found to be 0.923 for the entire sub-construct. The sub construct values exceeded the desirable standard of 0.60, which indicating high internal consistency.

SUMMARY AND CONCLUSION

From the above discussion it becomes clear that the non-availability of quality education resulting in unmet demand coupled with privatization of higher education and mushrooming of low-quality institutes generally in India has resulted in the phenomenon of student migration and Canada has become the favorite destination for migrating students because of its welcoming attitude and liberal policies. The survey conducted revealed that the major factors affecting the choice of institutes in Canada by *Punjabis* were Student Friendly Nature of the Institution, Linkage Factor, Ease of admission in Institutes and Prominence of Institutes.

Individually this rising mobility of students from India enhances the job prospects and cross pollination of ideas for the students, but for state as a whole it has major negative ramifications. This mass migration of Indian students is resulting in both in capital and brain drain. According to a Report by United Nations Development Programme (2019), Indian students going abroad for their higher studies costs India a foreign exchange outflow of $10 billion annually indicating human capital flight. Though it is not possible for the policy makers to stop the process of migration in a republican setup like India, but the need of the hour is to reverse this process by analysing the factors responsible for the migration of students, This can help government and institutes to frame their policies in such a way that they are able to help their students to stay back in their country.

The suggestive measures which can focus on increasing government funding towards the critical sector i.e., education are:

- Provision of opportunities for return migration to the students as it would lead to technical progress in the home country as the migrated students will contribute valuable skills and knowledge to their country.
- Formulation of sandwich training model should be formulated by lowering the costs at home institutes and increasing the returnee rate in order to encourage the students to stay in their home country combined with encouragement to cross border provision by increasing partnership among the Institutes and foreign providers combined with the provision of joint programmes through e learning and distance learning.
- Following a blend of government and private funding should be made effective for educational institutes which aims at providing students the best facilities to lure them back at home.

REFERENCES

Baser, B., & Öztürk, A. E. (2019). Turkey's Diaspora Governance Policies and Diasporas from Turkey in Germany: A Critical Reading of the Changing Dynamics. *Kinship and*.

Bauer, T., & Zimmermann, K. F. (1997). Network migration of ethnic Germans. *International Migration Review*, *31*(1), 143-149.

Clark, A. B. (2007). AFRICAN-AMERICAN PUBLIC HIGHER EDUCATIONAL ASSIMILATION IN CALIFORNIA WITH BUSINESS IMPLICATIONS. In *NAAAS Conference Proceedings* (p. 17). National Association of African American Studies.

Griffin, K., Del Pilar, W., McIntosh, K., & Griffin, A. (2012). "Oh, of course I'm going to go to college": Understanding how habitus shapes the college choice process of Black immigrant students. *Journal of Diversity in Higher Education*, *5*(2), 96.

Kane, P. M. (1996). Book Review: Miracles on the Border: Retablos of Mexican Migrants to the United States.

Manski, C. F. (2000). Economic analysis of social interactions. *Journal of economic perspectives*, *14*(3), 115-136.

Maringe, F. (2006). University and course choice: Implications for positioning, recruitment and marketing. *International journal of educational management*.

Singh, N., & Srivastava, D. K. (2018). Factors affecting students' preferences to study abroad programs: A case of indian business school students. *Journal of Teaching in International Business*, *29*(2), 96-112.

Timms, D. W. G. (1971). Book Review: Dimensions of Urban Social Structure: The Social Areas of Melbourne, Australia by F. LANCASTER JONES. Toronto: University of Toronto Press (London: Oxford University Press). 1969. pp. xii and 149.£ 3· 75. *Urban Studies*, *8*(2), 152-154.

Walsh, S., Cullinan, J., & Flannery, D. (2019). Exploring heterogeneity in willingness to pay for the attributes of higher education institutions. *Oxford Economic Papers*, *71*(1), 203-224.

http://kmf-publishers.com/jfis/

ARTICLE

OPEN

Businesses challenges during COVID-19 pandemic in developing countries

Dr Nidhi Srivastava, Anupa Maheshwari and Sonal Bansal[1]

This objective of this research is conducted to demonstrate the obstacles faced by the businesses during the corona virus pandemic in developing countries Methodologically, the study deployed secondary data analysis following a descriptive research design. Furthermore, both qualitative and quantitative research methods were used in this study. The secondary data analysis shows that many small and large businesses are facing difficulties, and that the unprecedented coronavirus crisis has destroyed many businesses around the world, making it difficult to survive with reduced revenue, job losses, life slowing down, and weak marketing performance, making it even more difficult to keep a level head and keep their business alive. To assist these Businesses, the government should employ a variety of approaches, including collaboration with affluent individuals and non-governmental groups. Moreover, during this coronavirus scare, small company owners should manage expectations and communicate with employees, suppliers, banks, and consumers. Reduce costs, be transparent with their workers about their finances, continue marketing, experiment with other delivery methods, and recover from the disaster.

Keywords: Business, Challenges, issues, Business Model

Journal of Formal and Informal Sectors (2022), 2(1); DOI: https://doi.org/10.5281/zenodo.6498876

INTRODUCTION

In the current era digitization requires a restructuring of processes, turning the company more agile, investing in more organic structures, reinforcing standardization and automation, in order to optimize the response capacity to customers. Innovative business models, new production processes, and the creation of knowledge-based products and services prevail. Although digitization is not a new phenomenon, the challenges and opportunities that are associated are constantly changing. Before the emergence of COVID-19, the challenges posed to digital transformation were essentially focused on the fourth industrial revolution, associated with the concepts of Industry 4.0, Internet of Things (IoT), and Web 4.0.

The COVID-19 pandemic has been challenging companies in various sectors of activity. Many of these organizations have been forced to adopt new internal working practices and felt a strong pressure to offer products through digital channels. Companies have experienced profound changes and in a very short time implemented solutions based on digital technologies. At the same time, it has become necessary to redesign management and1 collaboration models to ensure that

[1]IMSUC school of Management, India
Received: 10 February 2022 Revised: 10 March 2022 Accepted: 10 April 2022
Published online: 18 April 2022

nobody within organizations is left behind and feels excluded from this digitization process. In Berger states that a key factor for the success of teamwork in COVID-19 time is the inclusion of all team members in the company's major challenges. But this process has necessarily become more complex, as the flow of information that naturally flowed in the same physical space is now becoming a challenge to reach everyone in an agile and efficient way.

LITERATURE REVIEW

According to Jihyeong Son and Linda Niehm , Small corporations hire approximately 1/2 of of all employees withinside the United States. Nonetheless, our findings spotlight the economic vulnerability of many small companies and the quantity to which they may be impacted through the modern crisis. We located that forty three percentage of companies had been briefly closed in our sample, that's skewed in the direction of the retail sector, and that employment had plummeted through 40%. This is the maximum full-size blow to America's small corporations for the reason that Great Depression of the 1930s. Our findings suggest that lots of those businesses had little coins reachable on the begin of the pandemic, implying that they'll ought to appreciably curb costs, tackle more debt, or claim bankruptcy. This demonstrates how the immediacy of latest financing could have an effect on medium-time period outcomes.

According to Alexander W. Bartik , Many companies had tremendous IT problems even earlier than COVID-19. COVID-19 is forcing organizations to feature in new approaches greater fast than ever earlier than, and IT is being placed to the take a look at like by no means earlier than. Leaders need to act fast to deal with instantaneously structures resilience problems and lay a basis for the destiny as organizations juggle a selection of latest device priorities and challenges, which includes enterprise continuity risks, unexpected modifications in volume, real-time decision-making, personnel productivity, and protection risks. Chemical quarter executives, for example, are figuring out resilience as a crucial fulfillment component. Once we have got recovered from the pandemic, it will be crucial to broaden long-time period techniques for extended resilience, in addition to to apply the classes discovered to broaden a structures and skills roadmap that higher prepares your corporation for destiny disruptions.

According to Naveen Donthu , The coronavirus outbreak and its financial results arise at the fiftieth anniversary of Milton Friedman's influential declare that a company's social duty become to boom earnings withinside the law. With a pointy awareness on the quick term, this motto has taken root in maximum of industrial activity. The outcomes of the coronavirus outbreak can be addressed on this context through company leaders. Self-hobby has been more and more more at the leading edge of organisational behaviour even earlier than it struck. And what are the ramifications? The casualization of employment has reached formerly improbable levels. In 2017, 2.eight million human beings withinside the UK labored withinside the gig economy. One in each 4 of those personnel become paid much less than £7.50 in line with hour.These employees are those who can be toughest hit through the financial results of the coronavirus outbreak.

According to Ronen Harel, The papers on this unique trouble make massive contributions to the literature at the function of modern or superior generation in enhancing operations, gaining aggressive advantages, and boosting growth. However, studies and have a look at effects screen a clean indicator of ways slowly small organizations adapt or are organized to set up latest technology past the regular use of often used facts generation infrastructure.Furthermore, this editorial has long past on to evaluate times in which technology that small companies formerly considered "too superior" in regular situations can all of sudden come to be important while forced through uncommon situations and the want for survival, including all through the coronavirus disease (COVID-19)

outbreak. Regardless of the involuntary adoption of facts generation/structures to continue to exist the disruptions in small commercial enterprise fashions as mentioned all through the worldwide fitness pandemic, the implication stays that superior technology can offer massive advantages and won't be as highly-priced as usually assumed.

According to JM fegert , this Methodology Corner article aimed to offer a assessment of methodological improvements in reading massive statistics analytics and the way they may be carried out to cutting-edge organisational and control troubles bobbing up from the worldwide pandemic because of COVID-19, in addition to different grand demanding situations of our time. Given that COVID-19 is a 'black swan' occasion in that its complete consequences are hard to expect and assess (Yarovaya, Matkovskyy, and Jalan, 2020), we trust that the usage of numerous massive statistics analytic methods, statistics analytics gives a powerful pathway to higher recognize the occasion and the way enterprises can strategize and reply on this new era. We offer critical insights at the ordinary methodologies utilized in descriptive/diagnostic, predictive, and prescriptive analytics to deal with numerous enterprise issues via way of means of comparing the present literature at the subject. Our have a look at outlines some of demanding situations and massive statistics analytics programs in regions consisting of the destiny of work, new advertising practises with converting patron behaviour, product/carrier improvement and innovation, international fee chains, and demanding situations in sustainability, governance, and public policies, all in opposition to the backdrop of the pandemic.We talk some of possibilities in order to emerge for the control studies network to apply numerous analytical procedures to aid international and nearby efforts to address the remarkable demanding situations posed via way of means of the COVID-19 pandemic and its aftermath, for you to have long-time period implications for the worldwide economy. For students inquisitive about reading destiny employment trends, international crises and their effect on innovation and know-how sharing, enterprise resilience pushed via way of means of virtual and analytics capabilities, and the destiny functioning and sustainability of worldwide deliver chains, statistics analytics gives vital and full-size possibilities.

Table of Literature review

Year	Author	Topic	Data	Dependent	Independent variables
2020	Naveen Donth	Effects of COVID-19 on business and research	Secondary data	Business & Research	COVID-19
2008	Paul Schoemaker	**The Future Challenges of Business: Rethinking Management Education**	Secondary data	Mgt education	Future challenges
2019	Ndalahwa MUSA Masanja	**Contemporary issues in business**	Secondary data	issues	Business
2020	Didier Soopramanien et,al	Cutting-edge technologies for small business and innovation in the era of COVID-19 global health pandemic	Secondary data	Small businesses	COVID-19
2020	Jie Shen Joseph	COVID-19 Pandemic in the New Era of Big Data Analytics: Methodological Innovations and Future Research Directions	Secondary data	Future research direction	COVID-19
2020	*Andri Irawan*	**Challenges and opportunities for small and medium enterprises in eastern Indonesia in facing the covid-19 pandemic and the new normal era**	Secondary data	Small & medium enterprises	COVID-19
2020	Joel B.Carnevale[a]Isabella Hatak[b]	Employee adjustment and well-being in the era of COVID-19: Implications for human resource management	Secondary data	Organization life	COVID-19
2020	Eric W. Liguori & Thomas G. Pittz	Strategies for small business: Surviving and thriving in the era of COVID-19	Secondary data	Small business	COVID-19
2020	M. Kabir Hassan1 , Mustafa 2	Challenges for the Islamic Finance and banking in post COVID era and the role of Fintech	Secondary data	Banking	COVID-19
2021	ZahidHussain	Paradigm of technological convergence and digital transformation: The challenges of CH sectors in the global COVID-19 pandemic and commencing resilience-based structure for the post-COVID-19 era	Secondary data	organization	COVID-19
2021	Sang M.Lee[a]DonHeeLee[b]	Opportunities and challenges for contactless healthcare services in the post-COVID-19 Era	Secondary data	Health care sector	COVID-19
2021	Jingchen Zhao	Reimagining Corporate Social Responsibility in the Era of COVID-19: Embedding Resilience and Promoting Corporate Social Competence	Secondary data	CSR	COVID-19

Challenges and opportunities facing marketers during the Covid-19 crisis

Marketers and experts will have to adjust to a brave new world post-Covid-19. The importance of digital capabilities, communication management, and the concept of life-long learning has risen to the forefront. In other words, the way marketing is done has had to alter, and it has. As a result of the pandemic, a trend toward digitization that was already underway has become the mother of invention. Will things ever be the same as they were before? Almost likely not, and if we are to rise from the ashes of the old pre-Covid-19 world as phoenix-like marketers and business professionals, we must embrace the learning and difficulties. Pandemial marketers will have to assess and adjust their aims, operations, and strategy on a regular basis. The soft Ps are: People, who have either become robots or call center employees; Process, which is once again digital and under complete lockdown; and Physical evidence, or the ambiance.

Market during covid-19

Many well-known brands in a variety of industries are likely to go bankrupt as a result of the COVID-19 outbreak. Sears, JCPenney, Neiman Marcus, Hertz, and J. Crew are all experiencing significant financial difficulties. 80% of hotel rooms are vacant, airlines have reduced their workforce by 90%, and tourism locations are unlikely to make a profit. Exports, conferences, sporting events, and other mass gatherings, as well as cultural institutions, have all been postponed. We may ask ourselves an endless number of questions in relation to this very abrupt shutdown. Lockdowns have also brought consultation in general and personal services, such as hairdressers, gyms, and taxis, to a halt. Automobile, truck, and electronics industries have all unexpectedly closed their doors. China, for example, appears to be taking advantage of the situation by purchasing European infrastructure and technology. While some firms are faltering, others, such as those dependent on the Internet, are growing. People's eating habits have also evolved, with increased demand for takeaway, snacks, and alcohol. A market is more than simply a business; it is a network of actors who follow a set of rules.

Workplace and health transformations

Employee expectations of how, when, and where they work are shifting as a result of remote working and flexible work hours. This makes it difficult for businesses to preserve their company culture, identity, and employee motivation. Firms may experience productivity losses and face issues with staff safety and security. Working from home has increased the risk of depression, anxiety, post-traumatic stress disorder (PTSD), and lost productivity. In the United States alone, the expenses of poor mental health might reach $1.6 trillion over the next ten years. This was especially true in the early days of the pandemic, when polls revealed that remote working made 55 percent of employees less productive and engaged.

Consumer behavior during COVID-19

Isolation may be bad to us because we are social beings. There are signs that this is happening now, in the midst of the pandemic. People have begun to build nests, learn new skills, and take better care of their homes. This indicates that what is going on with us and our actions is complicated. What happens when "real life" is lived online and serves as a means of escaping the actual world? Trolling and the spread of bogus news on social media may often bring out the worst in us. This special issue covers a variety of topics of consumer behaviour.

Small business adoption of technologies during the COVID-19 pandemic

In December 2019, a global health catastrophe caused by coronavirus illness (COVID-19) began in Wuhan, China. As of July 10, 2020, the disease, which was termed a global pandemic by the World Health Organization (WHO, 2019), had infected 12.25 million people and killed 554,722. (ECDC, 2020). Virtual teams, Zoom virtual meetings, synchronous remote learning, and other technologies have now been utilized by many enterprises of all sizes. It's impossible to imagine how things might have turned out if the technologies in use by businesses during the COVID-19 global health epidemic were not as widespread as they are now. The impact of technology on some companies' business models has been amplified as a result of the outbreak and lockdown.

Small businesses have also been able to adapt and improve their business models by utilizing new strategies. Personal instruction or tuition, as well as client advice via virtual video platforms like Zoom, are two examples. Also, take-out delivery restaurants that use "dark kitchens" to prepare food for delivery, backed by online meal ordering. Small and medium-sized businesses, universities, and 3D enthusiasts in the United Kingdom and the United States used their printers to develop personal protective equipment. The chaos brought on by the introduction of COVID-19 is wreaking havoc on small enterprises. This article

provides practical and tactical ideas for navigating the pandemic-affected business world. Furthermore, because to the pandemic, several technologies that were being tested or thought to be "too cutting edge" before the lockdown now have a new potential market

Top 3 Marketing Challenges

Challenges: attract new customers

Gaining new consumers and expanding sales may be tough for many organisations as a result of the pandemic and a competitive business environment that is always changing.

Differentiation from the competition

It is challenging for firms to stand out in the ever-changing business landscape and the introduction of new businesses."An increasing number of [companies] are entering the [market]."Consumers are seeing more commercials than ever before, thanks to a significant number of firms focusing on digital marketing, and businesses are finding it increasingly harder to stand out and differentiate.

Challenge: to keep up with the change expectations for covid-19

COVID-19 will continue to have an impact on digital marketers (and most businesses)."The pandemic's influence hasn't subsided, and it's still affecting the sector this year."Because of the pandemic's frequent swings, businesses are finding it difficult to remain flexible and make long-term decisions. As the business environment continues to alter, businesses will need to adapt.

The Biggest Marketing Challenges Facing Brands in The Age Of COVID-19

The consequences have already been enormous, but we're just getting started. COVID-19 is bringing some of the largest marketing problems to brands, according to a new report by Newscred—my here's opinion on what they found, and how your brand may transform these challenges into opportunities.

Managing shifting priorities and tactics is the first challenge.

According to the report, managing shifting goals and strategies is a big difficulty for 56 percent of brands. Brands that had planned to attend or sponsor trade exhibitions, conferences, or other events, for example, had to immediately shift their focus to virtual events. While the requirement to alter priorities fast can be intimidating, it also provides an opportunity to try new things. There's no better moment than a recession to take a chance and start a business. Shifting priorities allows you to focus on something you've been putting off for months or years. It entails figuring out how to make a virtual replica of a project you've been working on in real life.

Changes in investment are rearranging budgets, which is a second challenge.

As those goals have altered, marketing departments' investments have shifted as well. Not unexpectedly, investments in live events have plummeted—in fact, they have all but vanished.

Marketing departments, on the other hand, are boosting their investments in a number of other media. Here are the numbers on which marketing channels are expected to see a rise or major increase in investment:

- Virtual event creation - 78 percent
- Web content - 72 percent
- Webinars - 67 percent
- Social media - 66 percent
- Blog content - 57 percent
- Video - 50 percent

"How can we still be of service to our customers?" brands are asking. Agencies and freelancers have a huge chance to provide creative services to new clientele. More than 2,000 C-suite executives were polled by Deloitte concerning climate change and environmental sustainability.

Action vs. impact

In the fight against climate change, more than six out of ten CxOs consider their companies as leaders. However, many of these same organizations are less likely to take activities that show they have incorporated climate considerations into their cultures or have the senior leadership support needed to make real changes. According to a survey, 19% of businesses have implemented at least four of the five "needle-moving" sustainability initiatives at a substantially higher rate than other businesses. Developing new, climate-friendly products or services, as well as requiring suppliers and partners to satisfy certain sustainability criteria, are examples of these initiatives. Over a third of those polled have yet to take more than one of these steps, and 14% have taken none at all. The people who have taken at least four of these ambitious steps are more concerned about climate change and hopeful about achieving net-zero emissions by 2030.

Becoming a climate leader

What can businesses learn from these climate pioneers in order to boost their own sustainability efforts? When it comes to designing an action plan for environmental sustainability, each firm, industry, and location faces distinct problems. The measures below can help firms get on the right track and stay ahead of the competition.

• Use well-known frameworks to help them define appropriate goals and track their progress.

• Create a specific plan to ensure that long-term goals are held accountable in the short term.

• Educate top executives and the board of directors.

• Treat climate metrics with the same rigor as other business indicators.

• Encourage collaboration.

• Integrate environmental considerations into every aspect of the business.

Not all organizations are at the same stage in their climate journeys, according to Deloitte's statistics, but all firms will eventually need to go beyond "why?" to "how?" to "how fast?" when it comes to climate action. We're in the midst of a critical decade for combating climate change, and strong efforts with concrete results are needed to quicken the pace of intervention—while there's still time to limit the harm.

1.The coronavirus, often known as coron Stress, is having an impact on small company owners. 51 percent of respondents say their company would not be able to weather a three-month economic downturn. 67 percent of respondents say it's tough to get emergency cash, and 53 percent say their staff can't work from home. Small business entrepreneurs must develop a mindset of opportunity recognition. The internet has democratized the marketplace and opened up a slew of new ways to interact with clients. Virtual business channels give you a chance to re-energize your search for product–market fit and innovative business models. Value creation, resource leveraging, passion, and tenacity are all important aspects of entrepreneurship. Small firms should think about these factors as they navigate an objectively bleak environment right now.

2.Many of you have experienced ups and downs in your careers and know what it's like to come up with new ideas. Building trust requires maintaining customer connections and communicating effectively with existing clients. Use Google and Amazon's web analytics tools to observe what search terms are trending. To convey any changes in business operations, small business owners should use their websites and social media channels. Consider reaching out to regular customers or those who provide a large amount of revenue.

3.Transparency, accountability, and over communication are all important. Consider your employees' demands as well as the current economic reality for many firms. This can assist them grasp your business strategy, build trust, and provide long-term

value to you. In these difficult economic times, being a strong leader is more crucial than ever.

Henry Ward, chief executive officer of Carta, discussed exactly how he took accountability in a recent post and it's absolutely worth a read Over communicating implies speaking with employees more frequently rather than less frequently, and it's crucial to realise that, while you as owners and entrepreneurs are used to dealing with uncertainty and ambiguity, most employees are not. Because we're all in this together, human connection is maybe more important than ever to our overall success.

4.It's critical to maintain contact with your entrepreneurial ecosystem. Maintaining a positive work environment encourages more creativity and innovation. This pandemic is putting pressure on entrepreneurs all across the world. Thankfully, many of our towns' entrepreneurial support organisations are supporting virtual connectivity options. For example, the Kauffman Foundation's 1 Million Cups programme, which operates in hundreds of cities, has been hosting weekly virtual community events; TechStars recently hosted a virtual COVID-19-themed Startup Weekend; and many municipalities around the world have continued their programming efforts in virtual environments.

Finally, at the start of this pandemic, we produced a book that provided advice on how to manage the risks connected with small business decisions. Entrepreneurship is never without its difficulties, and COVID-19 is already proving to be the most difficult obstacle that smallest enterprises will ever encounter. Markets (and life) will undoubtedly change in the foreseeable future, and small firms that can best adapt to shifting conditions will survive.

Example of companies

J. CrewI

It turned into clean to everybody via way of means of the summer time season of 2020 that shops had been in trouble. Malls have been closed, storefronts shuttered and clients locked up at domestic for weeks. As a result, income throughout the board had been plummeting. The canary withinside the coal mine turned into J. Crew, which had suffered from the decline in mall site visitors and the upward thrust of online shops for the previous few years and determined itself in no function to continue to exist at some stage in a international pandemic. The enterprise declared financial disaster in May because it sought out a manner to pay down its nearly $2 billion in debt. By September, the enterprise had determined a solution: Anchorage Capital Group, one in every of J. Crew's biggest lenders, has taken manipulate of the enterprise as its majority owner, at the same time as J. Crew receives to take $1.6 billion in debt off of its books.Before covid era which means 2019 , the revenue of J. Crewl about 67.2% but due to coming of covid their revenue falls and now J. Crewl has revenue of -16.23 according the survey conducted by forbes :

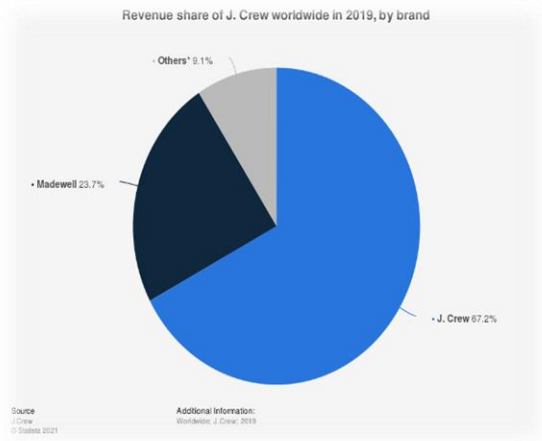

Crew entered financial ruin with a plan, reorganized incredibly quick and is now on its manner out, with a hazard to stabilize. Other shops to document withinside the COVID-technology have now no longer been as fortunate. Pier 1 and Stage Stores, amongst others, had been pressured into liquidation after failing to discover buyers. Stein Mart will probable observe them alongside that path. J.C. Penney plans to promote itself, however keeps pushing out closing dates and has been quiet in latest weeks approximately the

development on bidding. Neiman is ultimate in on a financial ruin reorganization, however the procedure has been fraught with public drama and revelations approximately diverse stakeholders. Bankruptcy can offer a 2d hazard for shops which have overextended their footprints and/or stability sheets. But the market, in particular in apparel, stays fairly competitive, continuously evolving and fashioned via way of means of COVID-19 for the foreseeable future.

GNC Holdings

The pandemic had a direct, terrible effect on many outlets. Clothing outlets had no extra customers, eating places needed to near their eating rooms, and so on. GNC, which sells herbal dietary supplements and vitamins, simply noticed developing call for for its merchandise for the duration of the pandemic. Yet it turned into too little too past due for the corporation, which turned into harassed via way of means of kind of $900 million in debt heading into 2020 earlier than it turned into compelled to shut a lot of its retail places for numerous weeks. Lower sales, a dwindling deliver of coins and upcoming debt bills led GNC to document for financial ruin in June – however do not worry, you will nonetheless have the ability to shop for your protein powder there. The corporation turned into allowed to promote itself to its biggest shareholder, Chinese corporation Harbin Pharmaceutical, for $770 million, and kind of 1,four hundred GNC places will stay open as a result.

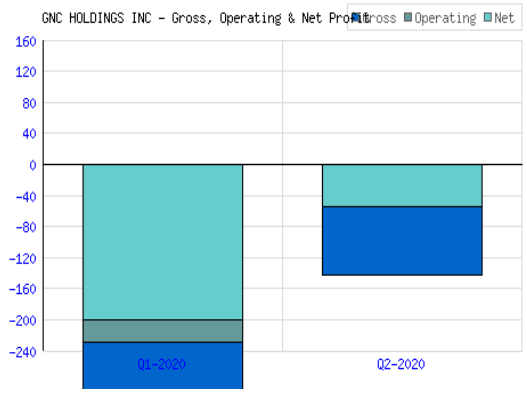

For the 3 months ended 31 March 2020, GNC Holdings Inc sales reduced 16% to $472.6M. Net loss relevant to not unusualplace stockholders expanded from $19M to $205.3M. Revenues replicate U.S. and Canada section lower of 13% to $424.2M, Manufacturing/Wholesale section lower of 79% to $14.9M, United States section lower of15% to $452.9M, Foreign section lower of 32% to $19.7M, Retail Sales- Us And Canada lower of 13% to $327.7M.

A specific obligation' -

GNC isn't on my own in maintaining its shops open. Other retailers, which includes Dillards, Hobby Lobby, Guitar Center and others have stayed open whilst tens of hundreds of shops throughout the united states of america have voluntarily closed, because the enterprise follows fitness reliable hints and neighborhood orders. The complement store's competitor, Vitamin Shoppe, has additionally opted to hold its shops open, aleven though it has decreased hours. "The Vitamin Shoppe keeps to observe all mandates and directives issued with the aid of using Federal, State and Local authorities. Various U.S. and Puerto Rican companies have certain meals and dietary complement retailers, which includes The Vitamin Shoppe, as critical businesses," the business enterprise stated in a statement.

GNC instructed its clients it changed into staying open as it believed it had "a completely unique obligation to hold to supply critical immune fitness answers in hard-to-attain areas." The business enterprise has promoted its curbside pick-up, in addition to auto-delivery, as clients live home. (Some personnel instructed Retail Dive visitors and income at their shops have declined significantly.) GNC has additionally highlighted dietary supplements it sells which include Vitamin C, probiotics and zinc which includes on its informational pages tied to COVID-19, aleven though the business enterprise is cautious to factor available aren't anyt any regarded preventative remedies or healing procedures for the disease.

Financial strains -

The pandemic hit at a critical time for GNC. The business enterprise's price range are below stress. Last week, S&P Global downgraded the store deep into junk territory on the idea that the business enterprise might default or be pressured to restructure its debt."We accept as true with situations for GNC are deteriorating drastically because of the coronavirus pandemic, the expected macroeconomic downturn, and the constrained get right of entry to to capital markets," S&P analysts led with the aid of using Khaled Lahlo stated in an emailed press release.The downgrade observed GNC's acknowledgment in advance this month in a securities submitting that it possibly might be not able to elevate sufficient coins from operations to pay a number of its debt and won't live to tell the tale as a going concern. The store has been leaning on its loyalty application and different offerings to stabilize its income. Yet GNC keeps to struggle, reporting this week that same-save income fell 2.4% with inside the fourth area and it racked up a internet loss of $33.five million. Lenders currently instructed GNC they had been not pursuing a refinancing cope with the business enterprise, however the store says it's miles nonetheless pursuing its options..

CONCLUSION

The results and pace of technological disruption in businesses are growing, and COVID-19 has expanded this trend. Companies have to be organized for this challenge, and to do so, they have to construct an revolutionary subculture that consists of all personnel with inside the process. In reality, COVID-19 has expedited virtual transformation methods now no longer simplest in corporations however additionally in humans and authorities institutions. Managers face a large trouble in being worried on this transition whilst additionally seeking to preserve the organization going with inside the face of a converting and unpredictable future. Furthermore, it's miles critical to word that the 3 most important elements of labor/society, market/income, and generation are inextricably linked. Companies' virtual advertising and income channels turns into extra critical as they emerge as extra digitized. It may even inspire teleworking and technical product intake due to the fact extra humans will speak via hybrid communique techniques which are handy from everywhere, now no longer simply with inside the bodily context in their places of work and residences.

The studies carried out aided with inside the research of the have an effect on of digitization on labour and social relations, advertising and income, and technological aspects. All of those regions are feeling the results of digitization. The adoption of a company's virtual transformation operations through its community, which incorporates its personnel, suppliers, partners, and consumers, can be vital to its success. The adoption of telework and a distance operating paradigm that allows excessive interactivity and cooperation, wherein expertise overcomes the geographical vicinity of those humans, is one of the issues which have been experienced. This research makes a specialty of realistic contributions with the aid of using delving right into a growing subject matter that has piqued the hobby of agencies and residents alike. This document can be a precious aid for companies as they put together for the troubles that the

post-COVID-19 international will bring, in addition to a beneficial aid for policymakers as they broaden enterprise assist measures. There are some flaws on this look at as well. First, COVID-19 remains a ways from being mitigated on the time of this look at, and boundaries on business interest and those mobility have handiest currently began to be comfortable in numerous nations. The short-time period consequences of COVID-19 might also additionally make many companies unviable. As a follow-up project, an empirical study with the enterprise area is probably carried out to advantage remarks from organizations on their destiny plans for digitalization. Furthermore, segmenting this look at and making use of it to numerous circumstances, which includes unique nations and financial sectors, might be beneficial.

REFERENCES

Ahlstrom, D., Arregle, J. L., Hitt, M. A., Qian, G., Ma, X., & Faems, D. (2020). Managing Technological, Sociopolitical, and Institutional Change in the New Normal. Journal of Management Studies, 57(3), 411–437. https://doi.org/10.1111/joms.12569

Bandura, A. (1986). Social foundations of thought and action: A cognitive social theory. New York: Pretince Hall.

Bong, C. L., Brasher, C., Chikumba, E., McDougall, R., Mellin-Olsen, J., & Enright, A. (2020). The COVID-19 Pandemic: Effects on Low and Middle-Income Countries. Anesthesia and Analgesia, XXX(Xxx). https://doi.org/10.1213/ANE.0000000000004846

Buheji, M., & Ahmed, D. (2020). Planning for "The New Normal": Foresight and Management of the Possibilities of Socio-economic Spillovers due to COVID-19 Pandemic. Business Management and Strategy, 11(1), 160. https://doi.org/10.5296/bms.v11i1.17044

Bulletin, S., Sciences, E., Etaec, S. I., Polkowski, Z., Dysarz, J., & Affairs, D. (2017). It Security Management in Small and Medium Enterprises. Buletin Ştiinţific: Universitatea Din Piteşti. Seria Ştiinţe Economice, 16(3), 134–148.

Cannistraci, C. V., & Capua, I. (2020). Age-adaptive and gender-balanced social interventions might be stepping stones to the next ne normal in COVID-19 outbreak. (May). https://doi.org/10.20944/preprints202005.0005.v1

Dar, M. S., Ahmed, S., & Raziq, A. (2017). Small and medium-size enterprises in Pakistan: definition and critical issues. Pakistan Business Review, (April 2017), 46–70. Retrieved from http://journals.iobmresearch.com/index.php/PBR/article/view/1245

Eniola, A. A., & Entebang, H. (2015). Government Policy and Performance of Small and Medium Business Management. International Journal of Academic Research in Business and Social Sciences, 5(2). https://doi.org/10.6007/ijarbss/v5-i2/1481

Halunko, V., Halunko, V., & Savyuk, M. (2019). Foreign Experience for Financing Small and Medium Business. Baltic Journal of Economic Studies, 4(5), 40. https://doi.org/10.30525/2256-0742/2018-4-5-40-45

Jacobson, J., & Gruzd, A. (2020). Cybervetting job applicants on social media: the new normal? Ethics and Information Technology. https://doi.org/10.1007/s10676-020-09526-2

KHAN, Y. K., & Arshad, A. S. M. (2019). Innovation Ecosystem in the Small and Medium Enterprises. Journal of Management Info, 6(1), 51–54. https://doi.org/10.31580/jmi.v6i1.461

Kristanti, F. T., Rahayu, S., & Isynuwardhana, D. (2019). The survival of small and medium business. Polish Journal of Management Studies, 20(2), 311–321. https://doi.org/10.17512/pjms.2019.20.2.2

Mahmudova, L. (2018). Definitining the Performance of Small and Medium Enterprises. Network Intelligence Studies, 6(12), 111–120.

1Mottaeva, A., & Gritsuk, N. (2017). Development of infrastructure of support of small and medium business. MATEC Web of Conferences, 106. https://doi.org/10.1051/matecconf/201710608083

Mustajab, D., Bauw, A., Rasyid, A., Irawan, A., Akbar, M. A., & Hamid, M. A. (2020). Working from Home Phenomenon as an Effort to Prevent COVID-19 Attacks and Its Impacts on Work Productivity. The Internationa Journal of Applied Business, 53(9), 1689–1699. https://doi.org/10.1017/CBO9781107415324.004

Panjaitan, J. M. P., Darwin, M., Bastian, I., & Sukamdi, S. (2020). What do banks, rural credit institutions, and regulators infer from the current strengths and standing of Indonesian SMEs? Gadjah Mada International Journal of Business, 22(1), 1–23. https://doi.org/10.22146/gamaijb.53968

1Peshkova, G. Y., Kiselev, S. V., & Zimina, I. V. (2020). Personnel support for innovative economic development in the new normality. Journal of Physics: Conference Series, 1515(5). https://doi.org/10.1088/1742-6596/1515/5/052074

Postavaru, N., Draghici, G., Filip, C., Mohammed, A.-R., & Mohammed, S. M. (2020). Business Management Strategies for Business Development. Organization of the Territory and Planning of Construction Works. Ovidius University Annals of Constanta - Series Civil Engineering, 21(1), 45–50. https://doi.org/10.2478/ouacsce-2019-0005

2Shyam, R. (2018). Impact of Social Media Marketing in Small and Medium Business. AMBER – ABBS Management Business and Entrepreneurship Review, 9(1), 50. https://doi.org/10.23874/amber/2018/v9/i1/176060

Tanasić, Z., Janjić, G., & Kosec, B. (2020). Lean Concept in Small and Medium Enterprises. Materials and Geoenvironment, 66(2), 129–137. https://doi.org/10.2478/rmzmag-2019-0010

Widjajani, & Nurjaman, R. (2020). The Framework of Strategic Agility in Small and Medium Enterprise. Journal of Physics: Conference Series, 1477(5). https://doi.org/10.1088/1742-6596/1477/5/052034

Zeegen, E. N., Yates, A. J., & Jevsevar, D. S. (2020). After the COVID-19 Pandemic: Returning to Normalcy or Returning to a New Normal? Journal of Arthroplasty, 1–5. https://doi.org/10.1016/j.arth.2020.04.040

2Adner, R. 2006. “Match Your Innovation Strategy to Your Innovation Ecosystem.” Harvard Business Review 84 (4): 98–107; 148.

Akpan, I. J. 2020. “Scientometric Evaluation and Visual Analytics of the Scientific Literature Production on Entrepreneurship, Small Business Ventures, and Innovation.” Journal of Small Business & Entrepreneurship: 1–29. doi:https://doi.org/10.1080/08276331.2020.1786229.

Akpan, I. J., and R. J. Brooks. 2012. “Users’ Perceptions of the Relative Costs and Benefits of 2D and 3D Visual Displays in Discrete-Event Simulation.” Simulation 88 (4): 464–480.

Akpan, I. J., I. C. Ezeume, E. Udomboso, A. Ezeume, and A. Akpan. 2020, May 4. “An Analysis of the Conceptual Structure of SARS-CoV-2 and COVID-19 Using Network Analysis and Visual Analytics.” 1–23. doi:https://doi.org/10.2139/ssrn.3593142

Akpan, I. J., and M. Shanker. 2019. “A Comparative Evaluation of the Effectiveness of Virtual Reality, 3D Visualization and 2D Visual

Interactive Simulation: An Exploratory Meta-Analysis." Simulation 95 (2): 145–170.

Akpan, I. J., and M. Shanker. 2017. "The Confirmed Realities and Myths about the Benefits and Costs of 3D Visualization and Virtual Reality in Discrete Event Modeling and Simulation: A Descriptive Meta-Analysis of Evidence from Research and Practice." Computers & Industrial Engineering 112: 197–211

Akpan, I. J., M. Shanker, and R. Razavi. 2019. "Improving the Success of Simulation Projects Using 3D Visualization and Virtual Reality." Journal of the Operational Research Society: 1–27. doi:https://doi.org/10.1080/01605682.2019.1641649. [

Arnold, C., D. Kiel, and K. I. Voigt. 2016. "How the Industrial Internet of Things Changes Business Models in Different Manufacturing Industries." International Journal of Innovation Management 20 (08): 1640015.

Azzone, G., and G. Noci. 1998. "Seeing Ecology and "Green" Innovations as a Source of Change." Journal of Organizational Change Management 11 (2): 94–111.

Beck, R., M. Avital, M. Rossi, and J. B. Thatcher. 2017. "Blockchain Technology in Business and Information Systems Research." Business & Information Systems Engineering 59 (6): 381–384

Caldeira, M., A. Serrano, R. Quaresma, C. Pedron, and M. Romão. 2012. "Information and Communication Technology Adoption for Business Benefits: A Case Analysis of an Integrated Paperless System." International Journal of Information Management 32 (2): 196–202.

Campbell, J. M., and J. Park. 2017. "Extending the Resource-Based View: Effects of Strategic Orientation toward Community on Small Business Performance." Journal of Retailing and Consumer Services 34: 302–308.

Centers for Disease Control and Prevention (CDC). 2020. Coronavirus Disease 2019 (COVID. Atlanta: CDC. https://www.cdc.gov/coronavirus/2019-ncov/about/symptoms.html

Daneshjoovash, S. K., P. Jafari, and A. Khamseh. 2020. "Effective Commercialization of High-Technology Entrepreneurial Ideas: A Meta-Synthetic Exploration of the Literature." Journal of Small Business & Entrepreneurship: 1–26. doi:https://doi.org/10.1080/08276331.2020.1789825

Daradkeh, M. 2019. "Visual Analytics Adoption in Business Enterprises: An Integrated Model of Technology Acceptance and Task-Technology Fit." International Journal of Information Systems in the Service Sector (IJISSS) 11 (1): 68–89.

Dijkman, R. M., B. Sprenkels, T. Peeters, and A. Janssen. 2015. "Business Models for the Internet of Things." International Journal of Information Management 35 (6): 672–678.

European Centre for Disease Prevention and Control (ECDC). 2020. COVID-19. Situation Update Worldwide. Stockholm: ECDC. Accessed 10 July 2020. https://www.ecdc.europa.eu/en/publications-data/download-todays-data-geographic-distribution-covid-19-cases-worldwide

Heider, A., M. Gerken, N. van Dinther, and M. Hülsbeck. 2020. "Business Model Innovation through Dynamic Capabilities in Small and Medium Enterprises – Evidence from the German Mittelstand." Journal of Business Research. doi: https://doi.org/10.1016/j.jbusres.2020.04.051.

Hitt, L. M., and E. Brynjolfsson. 1996. "Productivity, Business Profitability, and Consumer Surplus: Three Different Measures of Information Technology Value." MIS Quarterly 20 (2): 121–142

Huang, Chaolin, Yeming Wang, Xingwang Li, Lili Ren, Jianping Zhao, Yi Hu, Li Zhang, et al. 2020. "Clinical Features of Patients Infected with 2019 Novel Coronavirus in Wuhan, China." The Lancet 395 (10223): 497–506.

Humphries, J. E., C. Neilson, and G. Ulyssea. 2020. "The Evolving Impacts of COVID-19 on Small Businesses Since the CARES Act (April 26, 2020)." Cowles Foundation Discussion Paper No. 2230, Available at SSRN: http://dx.doi.org/10.2139/ssrn.3584745.

Iddawela, Y. 2020. "Social Distancing App Developed by Students and Alumni Goes Live." The London School of Economics and Political Science. Accessed 15 July 2020. http://www.lse.ac.uk/News/Latest-news-from-LSE/2020/d-April-20/Social-distancing-app-developed-by-students-and-alumni-goes-live.

Keim, D. A., F. Mansmann, J. Schneidewind, J. Thomas, and H. Ziegler. 2008. "Visual Analytics: Scope and Challenges." In Visual Data Mining, 76–90. Berlin-Heidelberg: Springer.

Kim, H. K., W. H. So, and S. M. Je. 2019. "A Big Data Framework for Network Security of Small and Medium Enterprises for Future Computing." The Journal of Supercomputing 75 (6): 3334–3367.

Kleinman, Z. 2020. "Coronavirus: Can We 3D-Print Our Way Out of the PPE Shortage?" April 10. Accessed 15 July 2020. https://www.bbc.com/news/health-52201696.

Kohlhammer, J., D. Keim, M. Pohl, G. Santucci, and G. Andrienko. 2011. "Solving Problems with Visual Analytics." Procedia Computer Science 7: 117–120

Laudon, K. C., and J. P. Laudon. 2019. Management Information Systems: Managing the Digital Firm. 16th ed. Harlow, UK: Pearson Education Limited

Makkonen, H., W. J. Johnston, and R. R. G. Javalgi. 2016. "A Behavioral Approach to Organizational Innovation Adoption." Journal of Business Research 69 (7): 2480–2489.

Mukhopadhyay, T., S. Kekre, and S. Kalathur. 1995. "Business Value of Information Technology: A Study of Electronic Data Interchange." MIS Quarterly 19 (2): 137–156.

Palattella, M. R., M. Dohler, A. Grieco, G. Rizzo, J. Torsner, T. Engel, and L. Ladid. 2016. "Internet of Things in the 5G Era: Enablers, Architecture, and Business Models." IEEE Journal on Selected Areas in Communications 34 (3): 510–527.

5Pantelidis, I. S. 2010. "Electronic Meal Experience: A Content Analysis of Online Restaurant Comments." Cornell Hospitality Quarterly 51 (4): 483–491

Puddister, K., and T. A. Small. 2020. "Trial by Zoom? The Response to COVID-19 by Canada's Courts." Canadian Journal of Political Science/Revue Canadienne de Science Politique : 1–5. doi:https://doi.org/10.1017/S0008423920000505

Saebi, T., N. J. Foss, and S. Linder. 2019. "Social Entrepreneurship Research: Past Achievements and Future Promises." Journal of Management 45 (1): 70–95.

Smith, A. D., and J. Correa. 2005. "Value-Added Benefits of Technology: E-Procurement and e-Commerce Related to the Health Care Industry." International Journal of Health Care Quality Assurance 18 (6): 458–473.

Szajna, B. 1996. "Empirical Evaluation of the Revised Technology Acceptance Model." Management Science 42 (1): 85–92.

Ting, D. S. W., L. Carin, V. Dzau, and T. Y. Wong. 2020. "Digital Technology and COVID-19." Nature Medicine 26 (4): 459–461

Turkina, E. 2018. "The Importance of Networking to Entrepreneurship: Montreal's Artificial

Intelligence Cluster and Its Born-Global Firm Element AI." Journal of Small Business & Entrepreneurship 30 (1): 1–18.

Vaccaro, A. R., Getz, C. L. Cohen, B. E. Cole, B. J. Donnally. I. I. I., and C. J. 2020. "Practice Management during the COVID-19 Pandemic." The Journal of the American Academy of Orthopaedic Surgeons 28 (11): 464–470.

Webster, P. 2020. "Virtual Health Care in the Era of COVID-19." The Lancet 395 (10231): 1180–1181.

World Health Organization (WHO). 2019. "Naming the Coronavirus Disease (COVID-19) and the Virus That Causes It." Accessed March 2020.

https://www.who.int/emergencies/diseases/novel-coronavirus-2019/technical-guidance/naming-the-coronavirus-disease-(covid-2019)-and-the-virus-that-causes-it

http://kmf-publishers.com/jfis/

RESEARCH ARTICLE

OPEN

A Study on Impact of Covid-19 on Informal Women Workers with Special Reference Pallapalayam, Karur (Dt) of Tamilnadu

Dr D.Ranjithkumar[1]

The COVID-19 pandemic has led to a dramatic loss of human life worldwide and presents an unprecedented challenge to public health, food systems and the world of work. The economic and social disruption caused by the pandemic is devastating: tens of millions of people are at risk of falling into extreme poverty, while the number of undernourished people, currently estimated at nearly 690 million, could increase by up to 132 million by the end of the year. The precarious nature of employment of women informal workers is examined using data from the Periodic Labour Force Survey (2018–19). To capture the gendered experiences of informal workers during the lockdown period, data from a series of rapid assessment studies is used. It was found that the unequal gendered division of domestic chores existed even before the onset of the pandemic, but the COVID-19- induced lockdowns have further worsened the situation. In terms of paid employment, women tend to work in risky, hazardous and stigmatised jobs as front-line health workers, waste-pickers, domestic workers, but do not receive the minimum wages as specified by the government. In the present study, an attempt was made to examine at micro level and the various aspects of impact of covid-19 of informal women workers in Pallapalayam, Karur (Dt) Of Tamilnadu. An attempt was also made to find if socio economic conditions of informal women workers, financial status and problems faced during the pandemic period.

Keywords: COVID-19, lockdown, informal sector, income and livelihood, loss

Journal of Formal and Informal Sectors (2022), 2(1); DOI: https://doi.org/10.5281/zenodo.6499082

INTRODUCTION

The COVID-19 pandemic has led to a dramatic loss of human life worldwide and presents an unprecedented challenge to public health, food systems and the world of work. The economic and social disruption caused by the pandemic is devastating: tens of millions of people are at risk of falling into extreme poverty, while the number of undernourished people, currently estimated at nearly 690 million, could increase by up to 132 million by the end of the year.

[1]Assistant Professor in Economics, Department of Economics, College -Bishop Heber College, Trichy, India
E mail: rskumarranjith@gmail.com
Received: 12 February 2022 Revised: 15 March 2022 Accepted: 10 April 2022
Published online: 18 April 2022

The precarious nature of employment of women informal workers is examined using data from the Periodic Labour Force Survey (2018–19). To capture the gendered experiences of informal workers during the lockdown period, data from a series of rapid assessment studies is used. It was found that the unequal gendered division of domestic chores existed even before the onset of the pandemic, but the COVID-19- induced lockdowns have further worsened the situation. In terms of paid employment, women tend to work in risky, hazardous and stigmatised jobs as front-line health workers, waste-pickers, domestic workers, but do not receive the minimum wages as specified by the government.[1]

In the present study, an attempt was made to examine at micro level and the various aspects of impact of covid-19 of informal women workers in Pallapalayam, Karur (Dt) Of Tamilnadu. An attempt was also made to find if socio economic conditions of informal women workers, financial status and problems faced during the pandemic period.

OVERVIEW OF INFORMALWOMEN WORKERS

The International Labour Organization (ILO 2020) report has indicated that as a result of COVID-19, an estimated 400 million informal sector workers are at risk of abject poverty in India. Women are likely to bear the brunt of job losses the most because much of their work is invisible, and they are more likely to work in informal work arrangements.[1] Moreover, the significant and widening gender gaps in workforce participation rates, employment and wages that existed before the lockdown were expected to intensify during the post-lockdown period. Additionally, India has recorded one of the most unequal gender division of household work, and according to the first (and only) national Time Use Survey (TUS) (1998–99), women spend around 4.47 hours per week on direct care work (that is, looking after children, elderly, sick and disabled), while men spent only 0.88 hours per week. Along with the gross imbalances in gender distribution of unpaid care work, the COVID-19 pandemic might worsen the situation by increasing women's burden of domestic chores, unduly cuts and lay-offs in employment.

The informal economy is classified and can be defined in two parts. The first one is informal employment , which refers to workers employed by formal, registered firms ona casual, day-wage basis, as well as subsistence actors such as self-employed workers.This includes individuals and entrepreneurs that might undertake piecework in theirown premises, street vendors and most domestic workers. They lack protection for non-payment of wages, retrenchment without notice, and often work under limitedoccupational safety conditions with no sick pay and health insurance.The second group involves informal sector enterprises , which engage in coordinated commercial activity, such as bazaar traders, restaurants, and manufacturing in small ad hoc factories. They may or may not have a discernible organisational structure, with operations (and employment) that grows or shrinks, depending upon the demand for the enterprises' outputs or services. They are built around an actor/entrepreneur who engages in a series of spot market transactions with customers, suppliers, and workers,depending upon demand (Geertz, 1967). Informal enterprises are unable to seek (formal) credit and have limited access to social programs and public goods. Informal sector enterprises rarely invest in productivity-enhancing equipment, upgrade workers skills, or achieve economies of scale, and tend to function on razor-thin margins. They have no recourse to legal protection should their customers renege on payment and can offer no form of security to their employees, pay no taxes, and ignore minimum wage regulations.

[1]Shiney chakraborty,Covid-19 and women informal sector workers in India,Economic and Political weekly, vol,55,Issue no.35,29 augest,2020.

REVIEW OF LITERATURE

Shineychakraborty 2020, evaluate the precarious nature of employment of women informal workers is examined using data from the Periodic Labour Force Survey (2018–19). To capture the gendered experiences of informal workers during the lockdown period, data from a series of rapid assessment studies is used. It was found that the unequal gendered division of domestic chores existed even before the onset of the pandemic, but the COVID-19- induced lockdowns have further worsened the situation

OBJECTIVES OF THE STUDY:

They study is focused impact of covid019 on informal women worker with special reference, pallapalayam ,karur (district). These are the following objectives.

- To study the socio-economic conditions of informal women workers, during pandemic period.
- To examine the financial status of informal women workers, during pandemic
- To face the problems of informal women workers during covid-19

FINDINGS

1.Area of living of the respondents that 70% of the respondents are in rural area and 30% of the respondents are in urban area. Majority 70% respondents are rural.

2.Occupation of the respondents that 20 % of the respondents are 100 days workers, 20% of the respondents are textiles worker, 18% of the respondent are farming, 12% of the respondents are cooking worker, 8% of the respondent are housekeeping worker, 6% of the respondent are toiler, 4% of the respondent are supervising, 2% of the respondent are own shop.Majority 20% of the respondent are 100 days worker and 20% of the respondent are textiles.

3.Income of the Respondents that 44% of the respondents are got income 5,001 to 10,000, 40% of the respondents are got below 5,000, 10% of the respondents are got 10,001 to 15,000 and 6% of the respondent are get income above 15,000. Majority 44% of the respondents are got income 5,001 to 10,000.

4. Government funds received by the respondents that 84% of the respondents are got government funds and 16% of the respondents are do not got government funds. Majority 84% respondents are got government funds.

5. **During covid-19 issues faced by the Respondents** that 74% of the respondents are acing financial issues during covid-19. 20% of the respondents are facing health issues during covid-19. 8% of the respondents are facing family issues during covid-19 and 2% of the respondents are facing work issues during covid-19. Majority 74% of the respondents are facing financial issues during covid-19.

SUGGESTIONS:

- The government shall give more financial assistance to informal women workers.
- The government and private financial institutions give, interest free loan to informal women workers.
- To give awareness about covid-19 and some safety measures (using mask, sanitizers, social distance and vaccine).
- To extent the social security schemes to informal women workers during pandemic period.
- All industrial units can give minimum work to informal women workers during pandemic period.
- To NGO's private enterprises, and Religious organization ccan help in hands to informal women worker.

CONCLUSIONS

This study has attempted to investigate the ground that informal women workers facing in the financial crisis during covid-19 pandemic. It has brought to the fore the multi-layered and multidimensional issues in the financial, job security of informal women worker and the effect of lockdown on them. The analysis of the data collected as indicated that many women workers are facing financial crisis and the effect substituting the jobs the current era of COVID-19. The government therefore needs to focus on providing financial support to informal women worker so that they are able to survive through this lockdown. The lack of government involvement in this issue states that informal women workers are not considered to have a bigger picture in the industrial sector owners are taking advantages of the situation.

REFERENCE

Shiney chakraborty,Covid-19 and women informal sector workers in India,Economic and Political weekly, vol,55,Issue no.35,29 augest,2020.

Divyaavasty, et.al., "women informal economy: its characteristics and legitimacy in the intergenerational contex", *cuadernoshispanoamericanos de psicologia*, Vol.No. 13, Issue No. 1, 2013

Dr.Geetika, et.al, "women workers in informal sector in India: a saga of lopsided utilization of human capital" *International conference on economics and finance research, vol.4 (2011)*

Kamala KantaMohapatra, "women workers in informal sector in India: Understanding the occupational vulnerability", *international journal of humanities and social science, vol.No 2,issue No 21, 2012*

DivyaAvasty, et.al., "women informal economy: its characteristics and legitimacy in the intergenerational contex", *cuadernoshispanoamericanos de psicologia*, Vol.No. 13, Issue No. 1, 2013

http://kmf-publishers.com/jfis/

RESEARCH ARTICLE

OPEN

An Analysis of Growth and Progress of Micro Enterprises in India : A Comparative Study of Rajasthan and Uttarakhand

Ms. Deepali Tomar [1]

MSMEs continue to be the backbone of the economy for countries like India where the problem of unemployment is steadily escalating and the agriculture land holdings continue to shrink. The State of Uttarakhand and Rajasthan in India is looking at sustainable and inclusive industrial growth as it faces an acute problem of migration from the hilly terrain to the plains due to lack of employment and business opportunities. The purpose of this paper is to comprehensively analyse the growth and progress of micro enterprises in Rajasthan and Uttarakhand and to explore the reasons responsible for hindering their growth. A descriptive study was conducted with the help of secondary data and is based on extensive review which significantly contributes in directing the stakeholders to take appropriate measures for speedy development of the region.

Keywords: MSME, unemployment, business opportunities, migration

Journal of Formal and Informal Sectors (2022), 2(1); DOI: https://doi.org/10.5281/zenodo.6499099

INTRODUCTION

In this tough global business environment micro Enterprises have survived and even flourished therefore ,in recent time the micro Enterprises sector is emerging as an option of supporting business environment of any developed and developing economy (Munoz. S. Mark Joseph (ed), (2010). In the present time all developed and developing countries are facing unemployment, unequal distribution of wealth, income and economic fluctuations, etc. therefore , micro enterprises has emerged as an economic growth engine in all the nations of the world. Development of micro enterprises can help to create immediate employment opportunities at lower investment level therefore micro Enterprises have emerged as a real bone for the poor (U. Jerinabi 2009). Micro enterprises are also called small businesses. In the present time world's all developed and developing Nations are adopting the various programs of micro enterprises development for creation of self – employment opportunities and economic development. During this economic environment, in the mid 1970 Dr. Yunus introduced Holistic development strategy by linkage micro enterprises to micro finance concept in Bangladesh. After the success of the development strategy in Bangladesh ,world -wide it was considered micro enterprises are the best way to generate employment opportunities and overall economic

[1]Ph.D. Research Scholar, Govt. Arts College, University of Kota, Kota, India Email: kittytomar52@gmail.com
Received: 15 February 2022 Revised: 15 March 2022 Accepted: 10 April 2022
Published online: 18 April 2022

growth .Since 1980, various development agencies and developing and developed nation had been started various micro enterprise development programs and after 1990 microenterprise have been become the synonyms of economic development in all the countries of the world . The World Bank has been actively engaged micro enterprise development since 1990 e as it approved roughly 49 project between 1989 and 1993 that aims to improve the living standards of low-income people and just under half of these incorporated micro enterprise development programme (Websler M. Leila, Riopelle Rabdall, and Chidzero Morie Anne, (1996).

MSMEs are said to be highly innovative , having high growth potential and a a major contribution to economy as a whole but the growth and performance of MSMEs could not be assessed accurately due to the sector comprising of more unorganised an unregistered sector rather than registered. Micro, small and medium enterprises are also facing various challenges that are uncommon to the large scale companies and multinational companies like lack of finance, marketing , skilled labour, technology , infrastructure and so on. In an endeavour to promote , develop and enhance competitiveness of the sector, Government of India enacted a single comprehensive legislation the MSME Act 2006 and also the NDA government has committed to boost micro ,small and medium enterprises by invoking slogan like "make in India'.

OBJECTIVES

1) To analyse the growth and progress of micro enterprises in Rajasthan and Uttarakhand.
2) To examine problems faced by micro enterprises in respect of availability of raw materials, finance, skill-promotion and capacity-building, labour and marketing strategies.
3) To suggest appropriate guidelines for strengthening the micro enterprises.

REVIEW OF LITERATURE

C. LALROLUAHPUIA (2016)- The paper "**STUDY ON THE PERFORMANCE OF MSMEs IN LUNGLEI DISTRICT, MIZORAM**", tried to find out the role and performance of micro, small and medium scale Enterprises in Lunglei district , Mizoram It was observed in the study that the small scale and medium scale industries in India can make a significant contribution to achieve social and economic objectives such as labour absorption, eradication of poverty, reducing regional imbalances, ensuring equitable distribution of national income , rural development and growth of various development activities **Manvendra Pratap Singh, Arpita Chakraborty and Mousumi Roy (2016)-** The paper "**ENTREPRENEURIAL COMMITMENT, ORGANIZATIONAL SUSTAINABILITY AND BUSINESS PERFORMANCE OF MANUFACTURING MSMES: EVIDENCE FROM INDIA",** was an attempt to understand the motivation of micro, small and medium enterprises towards organisational sustainability in such a competitive environment. Conceptual Framework was developed to test the link among entrepreneurial commitment, organisational sustainability and business performance. Structural equation modelling and other standard statistical analysis have been used to analyse the data collected through questionnaire survey from 262 manufacturing micro, small and medium enterprises in India. The study findings highlighted that organisation sustainability emerged as a driving source of motivation to improve the business performance among manufacturing micro ,small and medium enterprises in India. In addition ,there is significant mediation effect of organisational sustainability on entrepreneurial commitment and business performance . **Dr. Samuel Muiruri Muriithi (2017)-** The paper "**AFRICAN SMALL AND MEDIUM ENTERPRISES (SMES) CONTRIBUTIONS, CHALLENGES AND SOLUTIONS",** was based on empirical evidence and current research on small and medium scale Enterprises worldwide with the major focus on African small and medium scale enterprise

and how to improve their operations and profitability It was observed that the African government have to put more efforts t and come up with practical rather than theoretical solution because of small and medium scale Enterprises alarming rate of failures and solutions **Ms. Heena Upadhyay and Dr. Vivek Singh Kushwaha (2017)-** The paper "**Growth of MSMEs in INDIA: Its' Performance and Future Prospects",** highlighted the performance of Indian micro, small and medium enterprises and also forecasts the future trend. The research design was analytical research design. The data required for the present study had been collected from secondary sources It was observed that micro, small and medium enterprises not only help in industrialization of rural and backward areas but also they play a crucial role in providing large-scale employment opportunities at reasonably lower capital cost than large scale industries. Thereby ensuring more impartial distribution of national income, resources, wealth and thus reducing the regional imbalances. Economically this sector has strengthened the regions of the country and helps in achieving the self -reliance in every aspect of life. It also eliminate the imbalances between rich and poor. **Karabo Molefe, Natanya Meyer, Jacques de Jongh (2018)-** The paper "**A Comparative Analysis of the Socio-Economic Challenges Faced by SMMEs: The Case of the Emfuleni and Midvaal Local Municipal Areas**", tried to identify and compare the main socio-economic challenges faced by SMEs in two local areas within the Vaal Triangle region. The study used quantitative research approach and a cross-sectional research design through means of the survey method. A total of 198 SME owners that resided in both the Emfuleni (ELM) (n=100) and M idvaal (MLM) (n=98) local municipal areas were surveyed. Data analysis involved the use of descriptive statistics, cross- tabulations and chi-square tests. The study revealed that managerial and economic challenges were the biggest challenges faced by SMEs which include: lack of skilled labour, insufficient business training and local economic conditions. The findings of the study provide valuable insight towards fostering an enabling environment for SME development on local levels. **Simranjeet Kaur Virk, Pinnacci Negi (2019)-** The paper " **An Overview of MSME Sector in India with Special Reference to the State of Uttarakhand**",. performance of micro ,small and medium sector of India was highlighted by last annual report by government of India that is annual report of 2017 to 18 The study of observed that MSMEs have the potential to act as a catalyst of growth and does social crisis So observed that the Uttarakhand State should drive for MSME penetration across all the 13 district to ensure an overall development of the state Also the Uttrakhand government needs to provide adequate support to the MSME to develop to its full potential in the state **Dr. Megha Batola (Main Author), CA Bijaya Laxmi Thapliyal, Ms Neha Rani, Dr Ankur Singh Bist4 (2020)-** The paper "**Growth and Performance of Small and Medium Scale Enterprises in Women Entrepreneurship Development (A Case of Uttarakhand)",** studied the impact of type of industry, age of entrepreneur and form of Organisation on women entrepreneurial development in Uttarakhand. The study basically included the small and medium scale women entrepreneurs of Uttarakhand from Dehradun, Haridwar, Nainital, Udham Singh Nagar and Haldwani and the sample size for the study comprises of 300 women entrepreneurs chosen according to stratified random sampling. Cross-sectional bivariate analysis was performed to determine the impact of various factors on the growth and performance of women entrepreneurship development. It was observed from the study that womens are unaware of latest technological developments and market trends.

RESEARCH METHODOLOGY

The study area selected to accomplish the objectives of the paper is Uttarakhand and Rajasthan State.

Sample and Data Type

- In this study we have used secondary data due to time limitation from different sources.
- Descriptive in nature
- Quantitative study.

Sources of Data

- Industries Department Uttarakhand
- National sample survey organization
- PHD Chamber of commerce and industry
- Confederation of Indian Industry
- KVIC reports
- Directorate Of Industries

FINDINGS

TABLE 1 - Number of MSME's Registered in Rajasthan and Uttarakhand

Years	Micro		Small		Medium	
	Rajasthan	Uttarakhand	Raajasthan	Uttarakhand	Rajasthan	Uttarakhand
2015-16	29022	1337	4655	393	188	40
2016-17	89533	3485	11937	1132	448	103
2017-18	111190	4666	11231	951	359	69
2018-19	113144	7886	12404	1468	414	112
2019-20	153563	14988	18774	2011	548	148
2020-21	50971	7321	14722	1679	456	95

Source-_ Ministry of MSME, Government of India Report 2020-21

The above table shows the number of MSME's units registered from 2015-16 to 2020-21. It is quite evident from the table that before COVID-19 i.e. 2020 ,number of MSME's units were increasing over the years till 2019-20 both in Rajasthan and Uttarakhand, although MSME units were more in Rajasthan as compared to Uttarakhand. But, in 2020-21 i.e. after the outbreak of COVID-19 , MSMEunits declined both in Rajasthan as well as Uttarakhand state. However, Rajasthan is still much ahead than Uttarakhand .

TABLE 2- Total Employment in MSME in Rajasthan and Uttarakhand

Years	Micro		Small		Medium	
	Rajasthan	Uttarakhand	Raajasthan	Uttarakhand	Rajasthan	Uttarakhand
2015-16	139439	6806	69127	8968	10717	4223
2016-17	365161	21420	184473	29583	37002	8743
2017-18	388859	20066	134657	22223	25313	7007
2018-19	411678	37571	143735	28391	25272	12222
2019-20	530333	56617	195461	33684	31108	10570
2020-21	202119	36671	150319	24286	2665	7172

Source- Ministry of MSME, Government of India Report 2020-21

The above table shows the total employment in MSME sector from 2015-16 to 2020-21. It is quite evident from the table that before COVID-19 i.e. 2020 ,total employment was increasing over the years till 2019-20 both in Rajasthan and Uttarakhand, although total

employment was more in Rajasthan as compared to Uttarakhand. But, in 2020-21

i.e. after the outbreak of COVID-19 , employment declined both in Rajasthan as well as Uttarakhand state. However, Rajasthan is still much ahead than Uttarakhand .

TABLE 3 - Male Registration in MSME in Rajasthan and Uttarakhand

Years	Micro Rajasthan Male	Uttarakhand Male	Small Rajasthan Male	Uttarakhand Male	Medium Rajasthan Male	Uttarakhand Male
2015-16	1308	49	430	44	34	7
2016-17	13817	453	2235	231	104	27
2017-18	91252	3642	9496	785	324	66
2018-19	94969	5870	10667	1212	369	97
2019-20	129780	10089	16195	1718	483	127
2020-21	44246	6175	13325	1454	409	85

Source- Ministry of MSME, Government of India Report 2020-21

The above table shows the number of males registered in MSME sector from 2015-16 to 2020-21. It is quite evident from the table that before COVID-19 i.e. 2020 ,number of males who were registered in MSME sector were increasing over the years till 2019-20 both in Rajasthan and Uttarakhand, although males participation in MSME sector was more in Rajasthan as compared to Uttarakhand. But, in 2020-21 i.e. after the outbreak of COVID-19 , males participation declined both in Rajasthan as well as Uttarakhand state. However, Rajasthan is still much ahead than Uttarakhand.

.**TABLE 4 - Female Registration in MSME in Rajasthan and Uttarakhand**

Years	Micro Rajasthan Female	Uttarakhand Female	Small Rajasthan Female	Uttarakhand Female	Medium Rajasthan Female	Uttarakhand Female
2015-16	213	9	80	8	2	0
2016-17	3350	108	389	50	8	2
2017-18	19938	1024	1735	166	35	3
2018-19	18175	2016	1737	256	45	15
2019-20	23783	4899	2579	293	65	21
2020-21	6725	1146	1397	225	47	10

Source- Ministry of MSME, Government of India Report 2020-21

The above table shows the number of females registered in MSME sector from 2015-16 to 2020-21. It is quite evident from the table that before COVID-19 i.e. 2020 ,number of females who were registered in MSME sector were increasing over the years till 2019-20 both in Rajasthan and Uttarakhand, although females participation in MSME sector was more in Rajasthan as compared to Uttarakhand. But, in 2020-21 i.e. after the outbreak of COVID-19 , females participation declined both in Rajasthan as well as Uttarakhand state. However, Rajasthan is still much ahead than Uttarakhand .

Problems faced by MSME's in Uttarakhand and Rajasthan

UTTRAKHAND has been facing some crucial problems since last few decades that are responsible for hindering the performance of khadi village institutions in the state. Some of them are mentioned below;

- There is a problem of effective marketing and selling in the state due to uneven geographical factors.
- Inadequate Infrastructure
- Lower technology levels
- The industries are heavily weighed down by the rules and regulation imposed on them. investment in the khadi and village sector
- Shortage of energy leading to high energy cost is also an issue.
- Problems of storage, designing, packaging and product display
- Youth of the state lacks in proper skill development and training.
- Lack of proper research and development is also an issue.

CONCLUSION

- MSME's are termed as the "engine of economic growth" of any country both developed and developing but specially developing countries. It's the panacea to alleviate poverty and also a proven way to improve the quality of life particularly for the poor people.
- MSME's have the potential to act as catalysts of growth and thus curb this societal crisis.
- From the study it is observed that COVID-19 has seriously affected the MSME sector in both the states as there was a sharp decline in number of MSME units registered, employment and gender-wise participation.
- The State should strive for MSME's penetration across all the thirteen districts to ensure an overall development of the state.

RECOMMENDATIONS

1.Availability of Data

- There is no data which shows the percentage contribution of tourism on MSMEs, it should be made available
- Data should be made available for the revenue generated from tourism.

2. Infrastructural development

- Investments in tourism infrastructure may include development of both tourism as well as civic infrastructure. Also involves provision of tourist information bureaus and websites for providing requisite tourist information
- Efforts towards enhancement of overall transport infrastructure in the form of good quality roads, rail network, airports, availability of tourist vehicles etc. may also be strengthened in order to improve the overall infrastructure.
- There is less number of beds per million people. Steps should be taken to increase and improve accommodation facilities.

3. Human resource development

- Provision of additional training institutes, enhancing capacity of existing ones along with introduction of short term courses providing specific skills directed at hospitality and travel trade sector employees may be required for catering to the increased manpower and skill requirements.
- Rural youth may be provided vocational training through special

institutes to provide them employment opportunities.

4. **Marketing programs**

- Collaborative marketing efforts may be required for promotions. Focused branding and promotional campaigns may be designed.
- Involvement of local travel trade partners may be encouraged.
- Trips to involved destinations, informative sessions, financial support and incentives may be provided.
- A greater number of domestic tourism events and road shows may be organized in order to offset seasonality of tourist inflow. Events may be based on innovative themes of music, dance, sports, food, fruits, handicrafts, Indian culture and traditions, Indian villages, festivals etc.

REFERENCES

Munoz. S. Mark Joseph (ed), (2010); "Contemporary Microenterprise concept and case", Edward Elgar Publishing Limited, The Lypiatts, 15 Lansdown Road, Cheltenham Gloss GL50, JA UK PP1

Alom Fardous,& et.al (2016); "Success Factory of Overall Improvement of Micro Enterprises in Malaysia: an Empirical Study", Journal of Global Entrepreneurship Research 13 Feb. 2016 PP2-16 (Journaljger Springeropen.com)

Roluahpuia, C. (2016). A study on the Performance of MSMEs in Lunglei District, Mizoram.

Singh, M. P., Chakraborty, A., & Roy, M. (2016). Entrepreneurial commitment, organizational sustainability and business performance of manufacturing MSMEs: Evidence from India. Int. J. Appl. Bus. Econ. Res, 14(6), 4615-4631.

Muriithi, S. (2017). African small and medium enterprises (SMEs) contributions, challenges and solutions.

Upadhyay, M. H., & Kushwaha, V. S (2017). Growth of MSMEs in INDIA: Its' Performance and Future Prospects.

Molefe, K., Meyer, N., & de Jongh, J. (2018). A comparative analysis of the socio-economic challenges faced by SMMEs: The case of the Emfuleni and Midvaal local municipal areas. Journal of Economics and behavioral Studies, 10(4 (J)), 7-21.

Virk, S. K., & Negi, P (2019). An Overview of MSME Sector in India with Special Reference to the State of Uttarakhand.

Idbi , PP 17

Idbi , PP 470

www. Seattlesmallbizlawyer.com

WWW. Heartreachalaska.com/media/what is microenterprise.pdf